4V、3V300 Series Solenoid Valve,4A、3A 300 Series Pneumatic Control Valve

Overall Dimensions

4A310-08

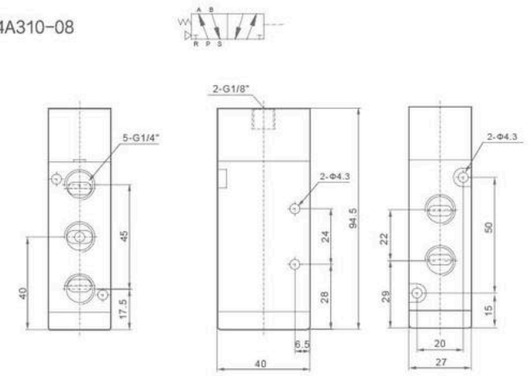

4A310-10

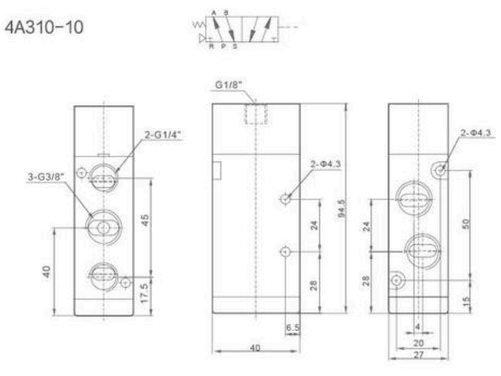

4A320-08

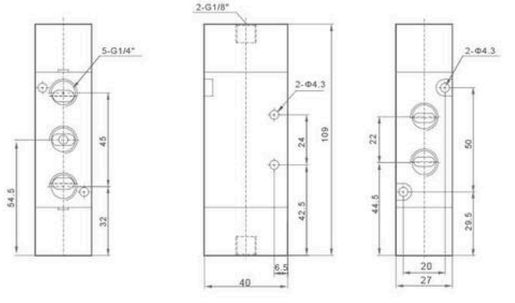

4A320-10

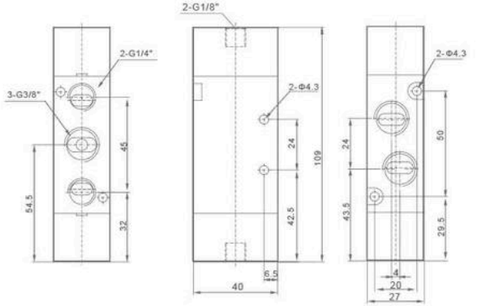

4A330-08

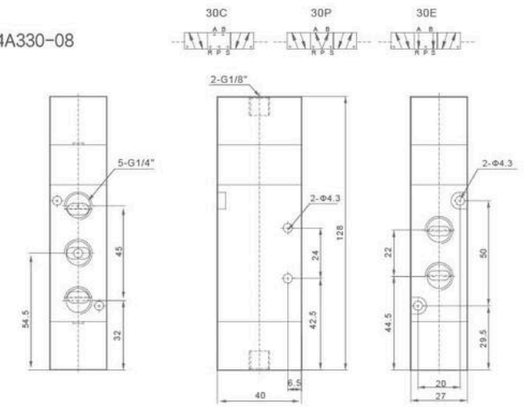

4A330-10

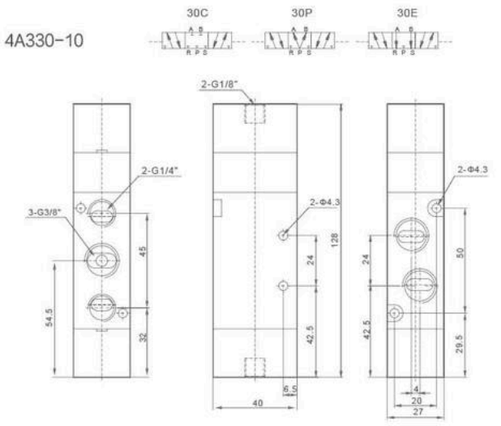

4V、3V300 Series Solenoid Valve,4A、3A300 Series Pneumatic Control Valve

Overall Dimensions

3V310-08

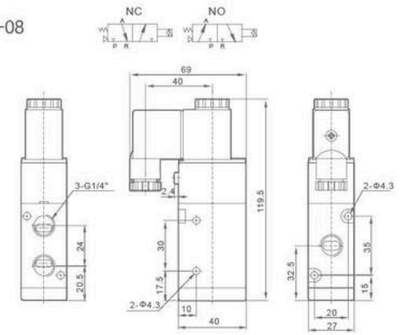

3V310-10

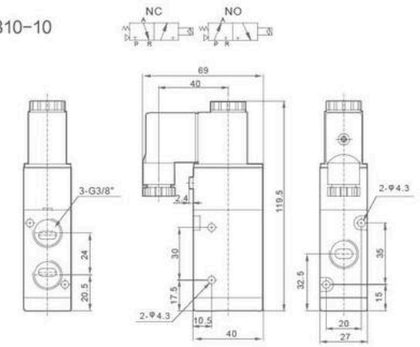

3V320-08

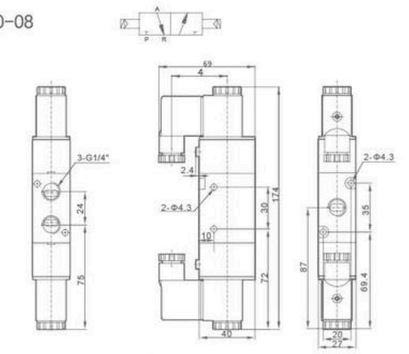

3V320-10

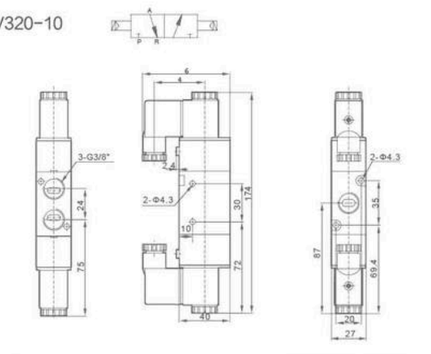

3A310-08

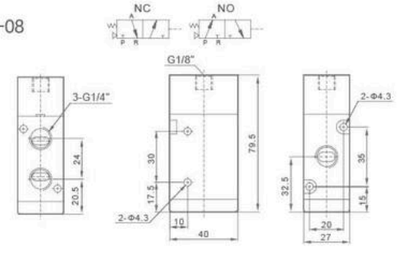

3A310-10

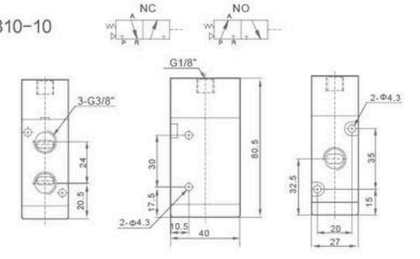

3A320-08

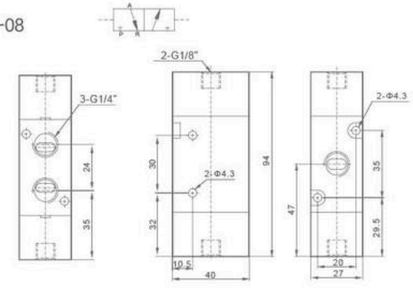

3A320-10

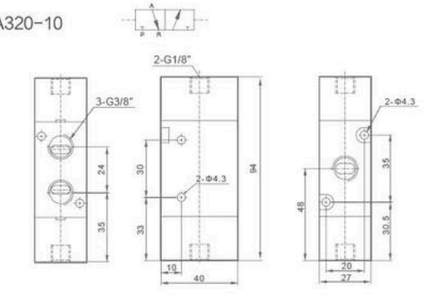

4V、3V400 Series Solenoid Valve,4A、3A400 Series Pneumatic Control Valve



4A410-15



4V420-15



3A410-15



3V410-15

Ordering Code

4V	4	10	—	10	□	—	AC220V	—	□
Specification Code	Series Code	Coil and Places		Port Size	Port connection and Initial State		Standard Voltage		Wiring Form

Specification Code
4V:Two(Three)-position Five-way Solenoid Valve
4A:Two(Three)-position Five-way Pneumatic control Valve
3V:Two-position Three-way Solenoid Valve
3A:Two-position Three-way Pneumatic Control Valve

Series Code
400 Series

Coil and Places
10:Single-head Double-position
20:Double-head Double-position
30C:Double-head Three-position Close Type
30E:Double-head Three-position Exhaust Type
30P:Double-head Three-position Pressure Type

Port Size
10:G3/8"
15:G1/2"

Port connection and Initial State
NC:Two-position Three-way Normal Close Type
NO:Two-positiOn Three-way Normal Open Type

Standard Voltage

DC12V		
DC24V		
AC24V	50Hz/60Hz	
AC110V	50Hz/60Hz	
AC220V	50Hz/60Hz	
AC380V	50Hz/60Hz	

Wiring Form
Blank:Standard Connector
LD:Brown With Lighting Connector
LD1:White With Lighting Connector
W:Lead Wire Type

Specifcation

Model	4V410-15 4A410-15	4V420-15 4A420-15	4V430C-15 4A430C-15	4V430E-15 4A430E-15	4V430P-15 4A430P-15
Position and Way NO.	Two-position Five-way		Three-position Five-way		
Effective Sectional Area	50mm²(CV=2.79)		30mm²(CV=1.68)		

Model	3V410-15	3V420-15	3A410-15	3A420-15
Position and Way NO.	Two-position Three-way			
Effective Section Area	50mm²(CV=2.79)			
Joint Pipe Bore	Air Inlet=Air Outlet=Exhaust=G1/2"			
Working Medium	40 Micron Filtered Air			
Motion Pattern	Inner Guide Type			
Working-pressure	0.15~0.8 M Pa			
Max. Pressure Resistance	1.2MPa			
Operating Temperature	5~50℃			
Voltage Range	±10%			
Power Consumption	AC: 4.5VA DC: 3W			
Insulation & Protection Class	F Class. IP65			
Wiring Form	Lead Wire or Connector type			
Highest Action Frequency	5 Cycle / Sec			
Shortest Excitation Time	0.05 Second			

4V、3V400 Series Solenoid Valve,4A、3A400 Series Pneumatic Control Valve

Overall Dimensions

4V410-15

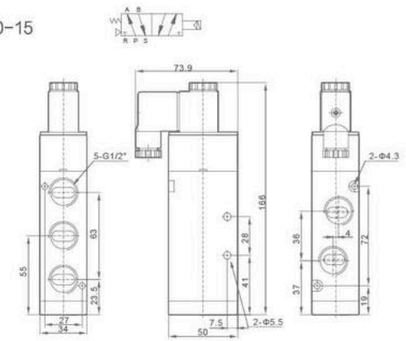

4V420-15
4V430-15

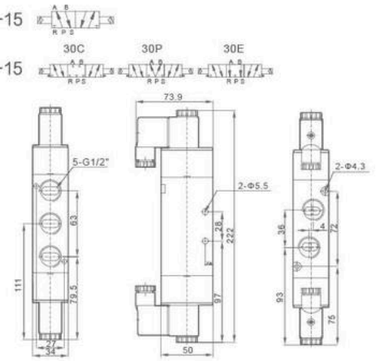

4A410-15

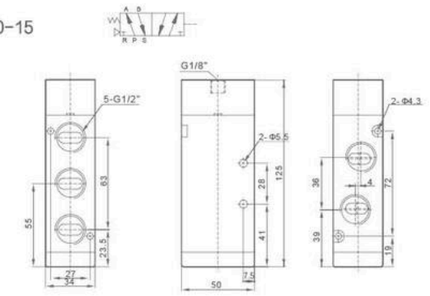

4A420-15
4A430-15

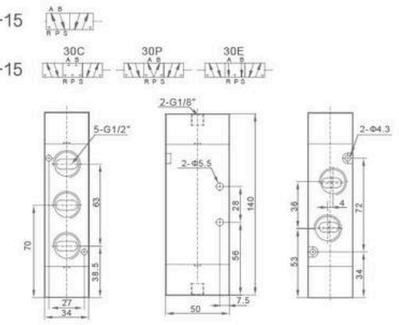

3V410-15

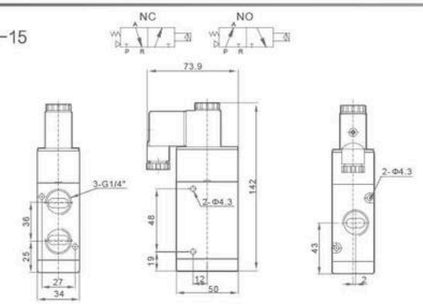

3V420-15

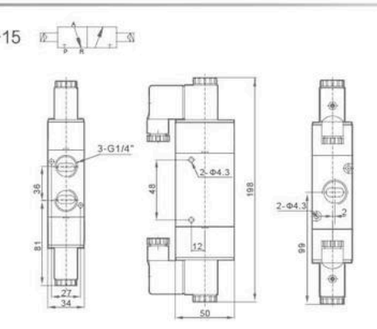

3A410-15

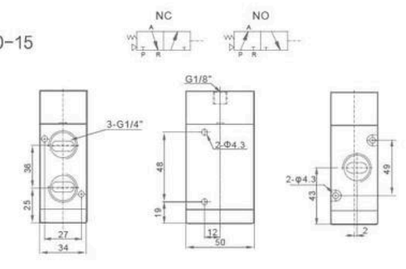

3A420-15

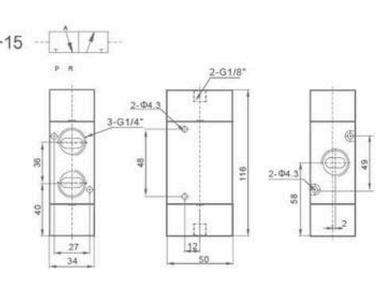

4M Series Plate Type Valve



4M210-08



4M310-10



4M220-08

Ordering Code

4M	2	10	—	06	—	AC220V	—	□

Specification Code
4M:Two-position Five-way Plate Type Valve

Body Size
2:1/8" and 1/4" Valve body
3:1/4" and 3/8" Valve body

Coil and Places
10:Single-head Double-position
20:Double-head Double-position

Port Size
06:G1/8"
08:G1/4"
10:G3/8

Standard Voltage
DC12V
DC24V
AC24V 50Hz/60Hz
AC110V 50Hz/60Hz
AC220V 50Hz/60Hz
AC380V 50Hz/60Hz

Wiring Form
Blank:Standard Connector
LD:Brown With Lighting Connector
LD1:White With Lighting Connector
W:Lead Wire Type

Graphic Symbol



Internal structure

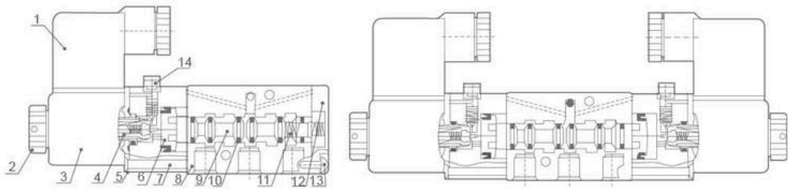

No	Designation	No	Designation
1	Connector	8	Valve body
2	Nut	9	Spool
3	Coil	10	O-Ring
4	Pilot untis	11	Spring
5	Plate	12	Rear cover
6	Piston	13	Screw
7	Screw	14	Manual override

Specifcation

Model	4M210-06	4M220-06	4M210-08	4M220-08	4M310-08	4M320-08	4M310-10	4M320-10
Working Medium	40 Micron Filtered Air							
Motion Pattern	Inner Guide Type							
Position and Way NO.	Two-position Five-way							
Effective Section Area	14mm²(CV=0.78)		16mm²(CV=0.89)		25mm²(CV=1.39)		30mm²(CV=1.67)	
Port Size	Air Inlet=Exhaust=G1/8"		Air Inlet=G1/4"Exhaust=G1/8"		Air Inlet=Exhaust=G1/4"		Air Inlet=G3/8"Exhaust=G1/4"	
Lubricate	Not Necessary							
Working-Pressure	0.15~0.8MPa							
Max.Pressure Resistance	1.2MPa							
Operating Temperature	5~60℃							
Voltage Range	-15%~+10%							
Power Consumption	AC380V:2.5VA,AC220V:2.0VA,AC110V:2.5VA,AC24V:3.5VA,DC24V:3.0W,DC12V:2.5W							
Insulation & Protection Class	F Class.IP65							
Wiring Form	Lead wire or Connector Type							
Highest Action Frequency	5 Cycle / Sec							
Shortest Excitation Time	0.05 Second							

4M Series Plate Type Valve

Overall Dimensions

4M210-06

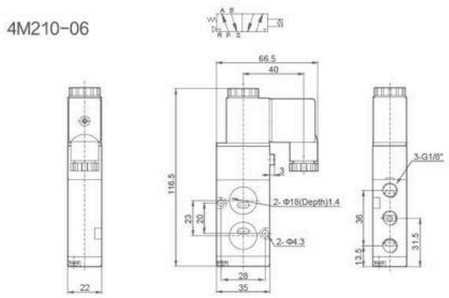

4M210-08

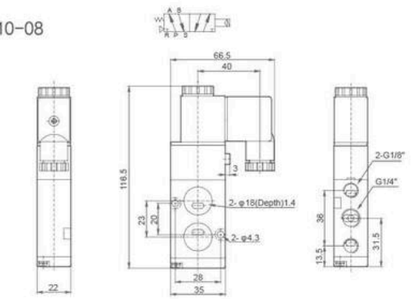

4M220-06

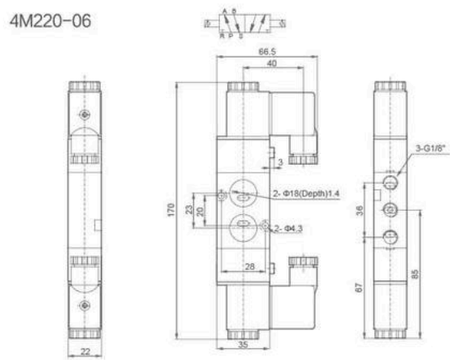

4M220-08

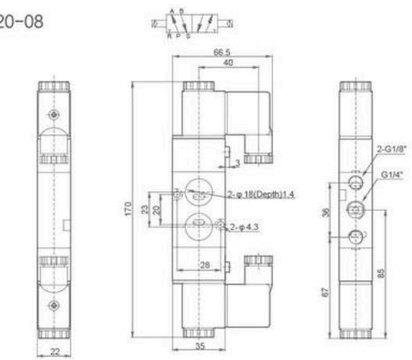

4M310-08

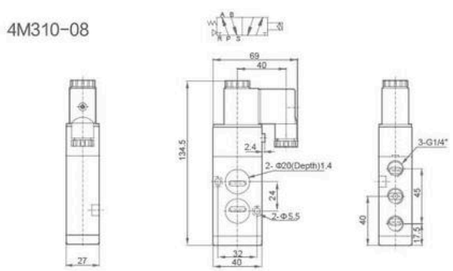

4M310-10

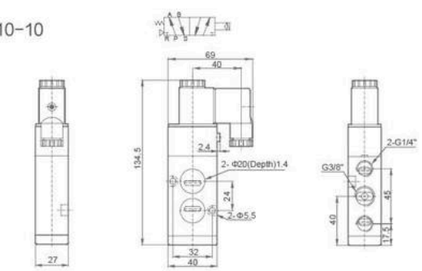

4M320-08

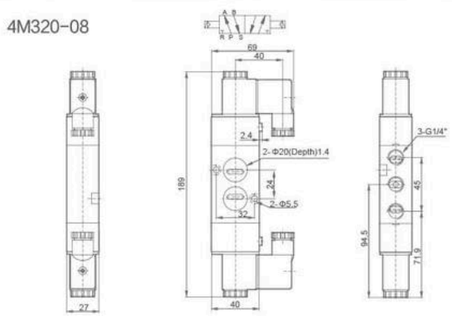

4M320-10

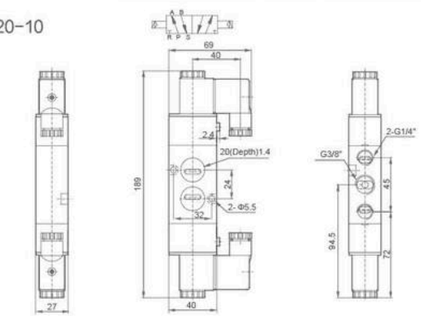

VF、VZ Series Solenoid Valve



VF5120



VF3230

Ordering Code

VF3	1	—	30	AC220V	—	□

Series Code
VF3 Series
VF5 Series
VZ5 Series

Coil and Places
1:Single-Head Double-position
2:Double-Head Double-position
3:Double-Head Three-position Close Type
4:Double-Head Three-position Exhaust Type
5:Double-Head Three-position Pressure Type

Order No.
VF3:30
VF5:20
VZ5:20

Standard Voltage
DC12V
DC24V
AC24V 50Hz/60Hz
AC110V 50Hz/60Hz
AC220V 50Hz/60Hz
AC380V 50Hz/60Hz

Wiring Form
Blank:Standard Connector
LD:With Lighting Connector
W:Lead Wire Type

Specifcation

Model	VF3130	VF3230	VF33(4/5)30	VF5120	VF5220	VF53(4/5)20	VZ5120	VZ5220	VZ53(4/5)20
Position and Way NO.	Two-position Five-way		Three-position Five-way	Two-position Five-way		Three-position Five-way	Two-position Five-way		Three-position Five-way
Effective Section Area	16mm²(CV=0.89)		12mm²(CV=0.67)	25mm²(CV=1.40)		18mm²(CV=1.00)	12mm²(CV=0.67)		9mm ²(CV=0.50)
Working Medium	40 Micron Filtered Air								
Motion Pattern	Inner Guide Type								
Working-Pressure	0.15~0.8MPa								
Max.Pressure Resistance	1.2MPa								
Operating Temperature	5~50℃								
Voltage Range	±10%								
Power Consumption	AC:4.5VA DC:3W								
Insulation & Protection Class	IP65/F Class.IP65								
Wiring Form	Lead Wire or Connector Type								
Highest Action Frequency	5 Cycle / Sec								
Shortest Excitation Time	0.05 Second								

VF、VZ Series Solenoid Valve

Overall Dimensions

VF3130

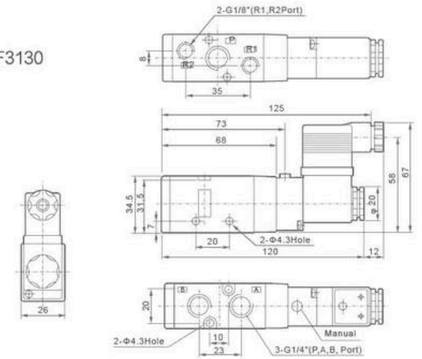

VF3230

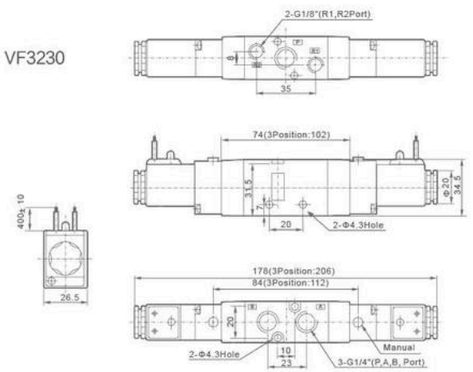

VF5120

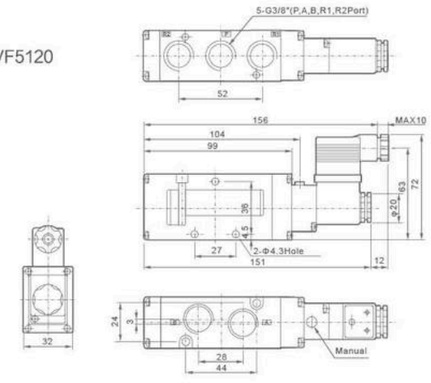

VF5220

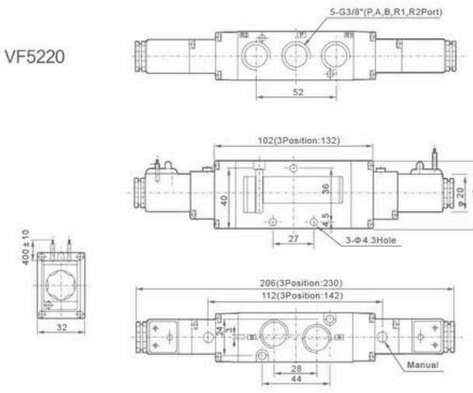

VZ5120

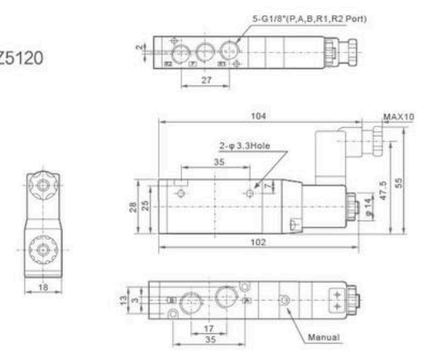

VZ5220

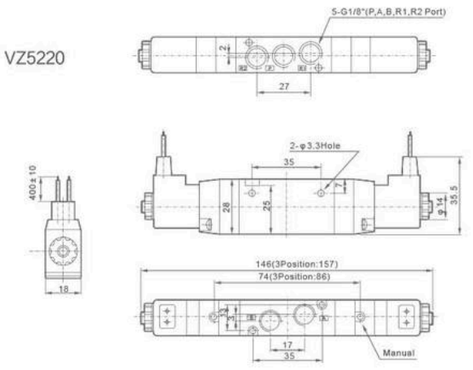

SY3000 Series 5 Port Low Energy Consumption High Performance Valve



SY3120-M5



SY3220-M5



SY3320-M5

Ordering Code

SY3	1	20	—	A	L	Z	D	M5
Series Code	**Function Enginery**	**Direct Piping Type**		**Nominal Voltage**	**Pin Type**		**Manual Operation Mode**	**Port Size**
SY3 Series	1: Single-head Double-position 2: Double-head Double-position 3: Double-head Three-position Close Type 4: Double-head Three-position Exhaust Type 5: Double-head Three-position Pressure Type			A:DC24V B:DC12V C:AC110V D:AC220V	L:Vertical Type M:Straingtine Type G:Lead Wire Type		Blank:Non-Locking D:Screwdriver Downward Locking E:Hand Lever Pushdown Locking	M5:M5

Specifcation

Model	SY3120-M5	SY3220-M5	SY3320-M5	SY3420-M5	SY3520-M5
Function Enginery	Single-head Double-position	Double-head Double-position	Double-head Three-position Close Type	Double-head Three-position Exhaust Type	Double-head Three-position Pressure Type
Cv Valve(P-A/B)	0.25	0.19			0.30
Cv Valve(A/B-R/S)	0.27	0.2	0.25		
Joint Pipe Bore	M5				
Working Pressure	0.15~0.7MPa	0.2~0.7MPa			
Working Medium	40 Micron Filtered Air				
Motion Pattern	Inner Guide Type				
Highest Action Frequency	15cycle/Second	5cycle/Second			
Response Time(ms)	12 below	15 below			
Operating Temperature	-5~60℃				

Overall Dimensions

SY3120-M5

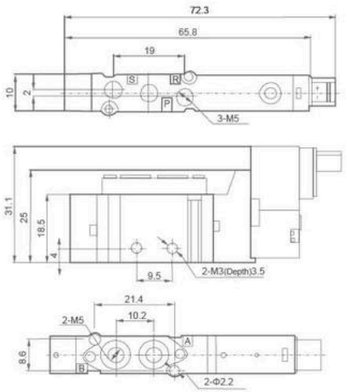

SY3220-M5

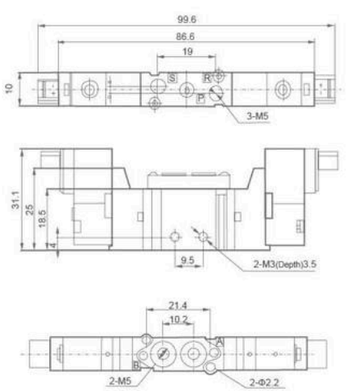

SY3320-M5

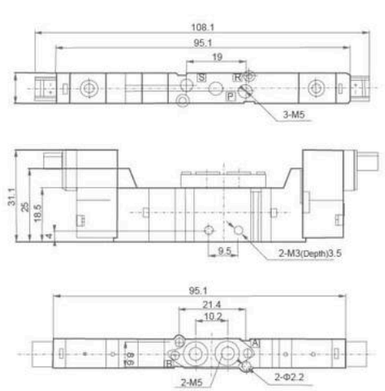

SY5000 Series 5 Port Low Energy Consumption High Performance Valve



SY5120-01



SY5220-01



SY5320-01

Ordering Code

SY5	1	20	—	A	L	Z	D	01
Series Code	**Function Enginery**	**Direct Piping Type**		**Nominal Voltage**	**Pin Type**		**Manual Operation Mode**	**Port Size**
SY5 Series	1: Single-head Double-position 2: Double-head Double-position 3: Double-head Three-position Close Type 4: Double-head Three-position Exhaust Type 5: Double-head Three-position Pressure Type			A:DC24V B:DC12V C:AC110V D:AC220V	L:Vertical Type M:Straingtine Type G:Lead Wire Type		Blank:Non-Locking D:Screwdriver Downward Locking E:Hand Lever Pushdown Locking	01:G1/8"

Specifcation

Model	SY5120-01	SY5220-01	SY5320-01	SY5420-01	SY5520-01
Function Enginery	Single-head Double-position	Double-head Double-position	Double-head Three-position Close Type	Double-head Three-position Exhaust Type	Double-head Three-position Pressure Type
Cv Valve(P-A/B)	0.67	0.52	0.46	0.89	
Cv Valve(A/B-R/S)	0.69	0.49	0.75	0.50	
Joint Pipe Bore	G1/8"				
Working Pressure	0.15~0.7MPa	0.2~0.7MPa			
Working Medium	40 Micron Filtered Air				
Motion Pattern	Inner Guide Type				
Highest Action Frequency	8 cycle/Second	5cycle/Second			
Response Time(ms)	19 below	32 below			
Operating Temperature	-5~60℃				

Overall Dimensions

SY5120-01

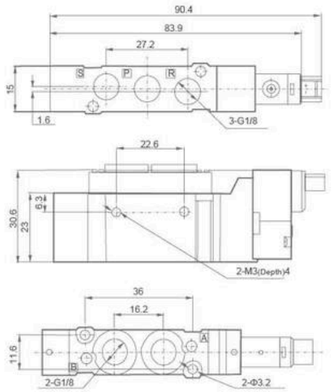

SY5220-01

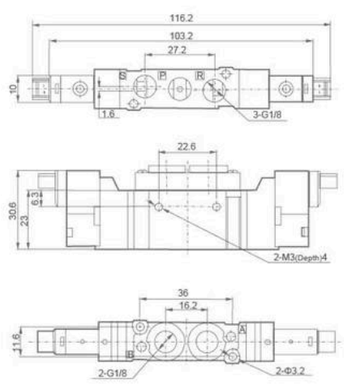

SY5320-01

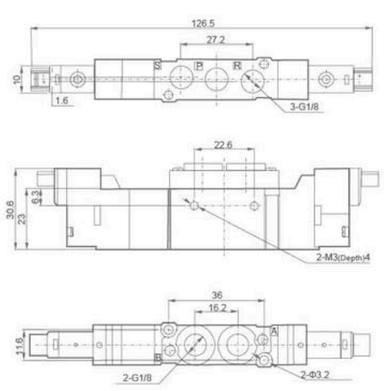

SY7000 Series 5 Port Low Energy Consumption High Performance Valve



SY7120-02



SY7220-02



SY7320-02

Ordering Code

SY7	1	20	—	A	L	Z	D	02

Series Code
SY7 Series

Function Enginery
1: Single-head Double-position
2: Double-head Double-position
3: Double-head Three-position Close Type
4: Double-head Three-position Exhaust Type
5: Double-head Three-position Pressure Type

Direct Piping Type

Nominal Voltage
A:DC24V
B:DC12V
C:AC110V
D:AC220V

Pin Type
L:Vertical Type
M:Straingtine Type
G:Lead Wire Type

Manual Operation Mode
Blank:Non-Locking
D:Screwdriver Downward Locking
E:Hand Lever Pushdown Locking

Port Size
02:G1/4"

Specifcation

Model	SY7120-02	SY7220-02	SY7320-02	SY7420-02	SY7520-02
Function Enginery	Single-head Double-position	Double-head Double-position	Double-head Three-position Close Type	Double-head Three-position Exhaust Type	Double-head Three-position Pressure Type
Cv Valve(P-A/B)	1.15		0.84	0.74	1.36
Cv Valve(A/B-R/S)	1.05		0.75	1.15	0.66
Joint Pipe Bore	G1/4"				
Working Pressure	0.15~0.7MPa		0.2~0.7MPa		
Working Medium	40 Micron Filtered Air				
Motion Pattern	Inner Guide Type				
Highest Action Frequency	8 cycle/Second		5 cycle/Second		
Response Time(ms)	31 below		50 below		
Operating Temperature	-5~60℃				

Overall Dimensions

SY7120-02

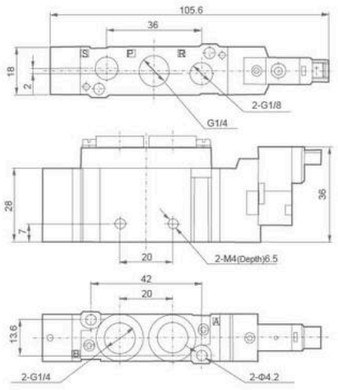

SY7220-02

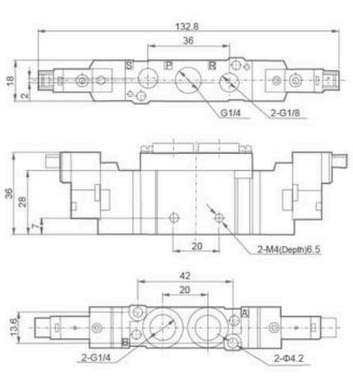

SY7320-02

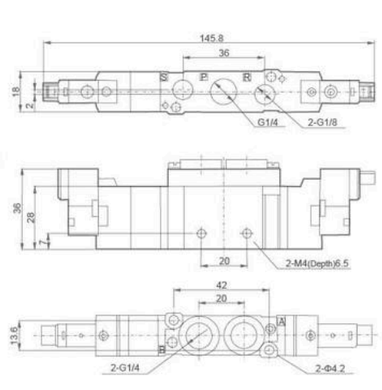

3V1 Series Solenoid Valve



3V1-06

Ordering Code

3V	1	06	—	B	—	AC220V	—	□

Specification Code
3V: Two-position Three-way Solenoid Valve

Series Code
100 Series

Port Size
M5:M5×0.8
06:G1/8"

Connecting Type
Blank:Pipe Connection Type
B:Plate Connection Type

Standard Voltage
DC12v
DC24v
AC24v 50Hz/60Hz
AC110v 50Hz/60Hz
AC220v 50Hz/60Hz
AC380v 50Hz/60Hz

Wiring Form
Blank:Standard Connector
G:Lead Wire Type
L:With Lighting Connector

Specifcation

Model	3V1-M5	3V1-06
Working Medium	40 Micron Filtered Air	
Motion Pattern	Direct Drive Type	
Joint Pipe Bore	M5	1/8"
Ambient Temperature	-10~+60℃	
Gas Temperature	5~60℃	
Air Outlet Diameter	1.0mm	
Lubrication	Not Necessary	
Working-pressure	0~0.8MPa	
Max.Pressure Resistance	1.2MPa	
Power Consumption	AC:4.5VA DC:3.0W	
Protect Class	IP65	
Power Connection Form	Gorl	
Material of Body	Aluminum alloy	
Highest Action Frequency	10Cycle / Sec	
Insulation	F Class	
Voltage Range	±10%	
Shortest Excitation Time	0.05 Second	

Overall Dimensions

3V1-06

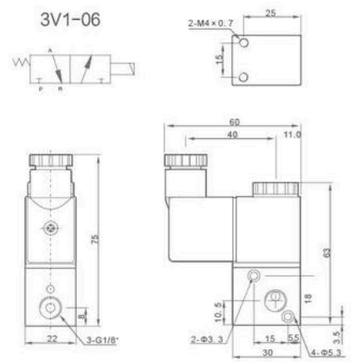

Overall Dimensions

3V1-06-3F

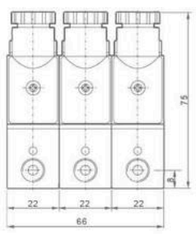

3V1-06B-3F

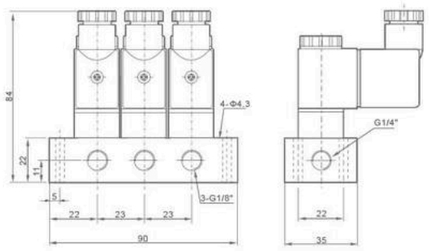

3V1-06B

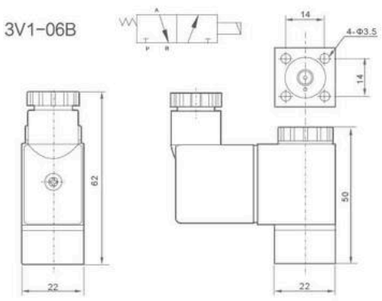

Base For 4V、4A Series Valve



Ordering Code

4V — 100M — □F

Series Code
4V:For 4V Series ues
4A:For 4A Series ues

Specification Code
100M:Base for 100 Series Use
200M:Base for 200 Series Use
300M:Base for 300 Series Use
400M:Base for 400 Series Use

Joint Base Number
100M:Wantonly Joint
200M:Wantonly Joint
300M:Wantonly Joint
400M:Wantonly Joint

Overall Dimensions

4A Series

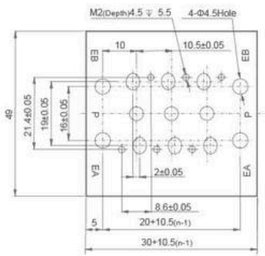

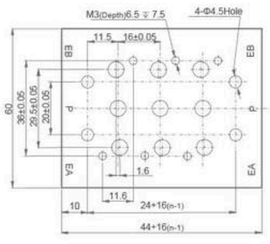

4V Series

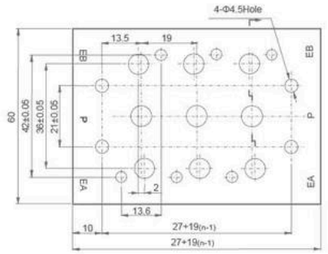

Dimension Sheet(4A Series)

Model	A	B	C	E	F	G	H	I	J	K	L														
											1F	2F	3F	4F	5F	6F	7F	8F	9F	10F	11F	12F	13F	14F	15F	16F
100M-□F	58	43.2	20	4.5	18.3	19	5	10	0.8	139.4	38	57	76	95	114	133	152	171	190	209	228	247	266	285	304	323
200M-□F	61	50.7	21	4.5	22.4	23	6	12	1.2	170	46	69	92	115	138	161	184	207	230	253	276	299	322	345	368	391
300M-□F	75	64.8	26	4.5	27.3	27	6	13.5	2.5	188.8	54	82	110	138	166	194	22	250	278	306	334	362	-	-	-	-
400M-□F	104	94.5	32	5.5	34.3	31.5	7	14.5	5	221.8	63	98	133	168	203	238	273	-	-	-	-	-	-	-	-	-

Model	M	P																Q	R	S	T	U	V	W	X	Y
		1F	2F	3F	4F	5F	6F	7F	8F	9F	10F	11F	12F	13F	14F	15F	16F									
100M-□F	154.5	28	47	66	85	104	123	142	161	180	199	218	237	256	275	294	313	G1/4"	40	30	29	14	9	79	25	27
200M-□F	189	34	57	80	103	126	149	172	195	218	241	264	287	310	333	256	379	G1/4"	43	32	30.5	14.5	9	93	26	35
300M-□F	208	42	70	98	126	154	182	210	238	266	294	322	350	-	-	-	-	G3/8"	53	48	37.5	13.5	11	99.5	30	40
400M-□F	243	49	84	119	154	189	224	259	-	-	-	-	-	-	-	-	-	G1/2"	68	67	52	18.5	18	112.5	38	50

Dimension Sheet(4V Series)

Model	A	B	C	E	F	G	H	I	J	K	L															
											1F	2F	3F	4F	5F	6F	7F	8F	9F	10F	11F	12F	13F	14F	15F	16F
100M-□F	58	43.2	20	4.5	18.3	19	5	10	0.8	81	38	57	76	95	114	133	152	171	190	209	225	247	266	285	304	323
200M-□F	61	50.7	21	4.5	22.4	23	6	12	1.2	92	46	69	92	115	138	161	184	207	230	2853	276	299	322	345	368	391
300M-□F	75	64.8	26	4.5	27.3	27	6	13.5	2.5	111	54	82	110	138	166	194	22	250	278	205	224	362	-	-	-	-
400M-□F	104	94.5	32	5.5	34.3	31.5	7	14.5	5	142	71	98	133	168	203	238	273	-	-	-	-	-	-	-	-	-

Model	M	P																Q	R	S	T	U	V	X	Y
		1F	2F	3F	4F	5F	6F	7F	8F	9F	10F	11F	12F	13F	14F	15F	16F								
100M-□F	96	28	47	66	85	104	123	142	161	180	199	218	237	256	275	294	313	G1/4"	40	30	29	14	9	25	27
200M-□F	111	34	57	80	103	126	149	172	195	218	241	264	287	310	333	256	379	G1/4"	43	32	30.5	14.5	9	26	35
300M-□F	130	42	70	98	126	154	182	210	238	266	294	322	350	-	-	-	-	G3/8"	53	48	37.5	13.5	11	30	40
400M-□F	163	49	84	119	154	189	224	259	-	-	-	-	-	-	-	-	-	G1/2"	68	67	52	18.5	18	38	50

Base For VF、VZ Series Valve



Ordering Code

VF3000M — □F

Specification Code
VF3000M:For VF3 Series Use
VF5000M:For VF5 Series Use
VZ5000M:For VZ5 Series Use

Joint Base Number
VF3000M:Wantonly Joint
VF5000M:Wantonly Joint
VZ5000M:Wantonly Joint

Overall Dimensions

VF3000M

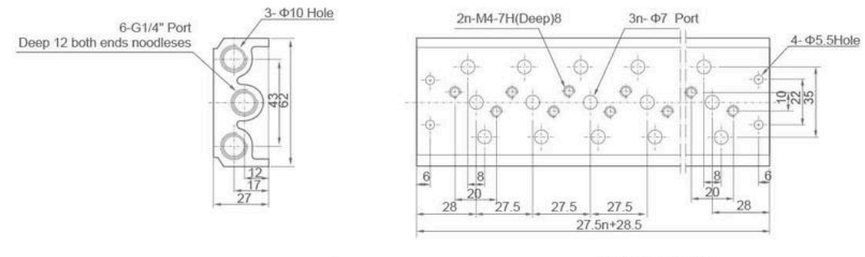

VF5000M

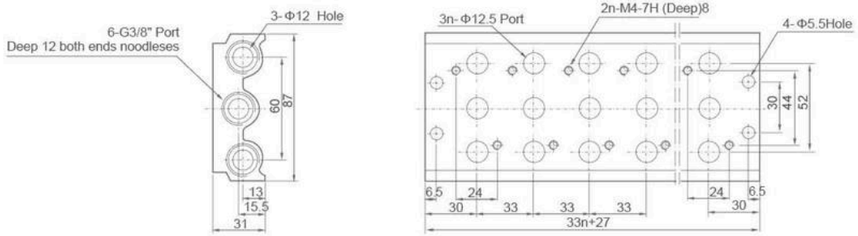

VZ5000M

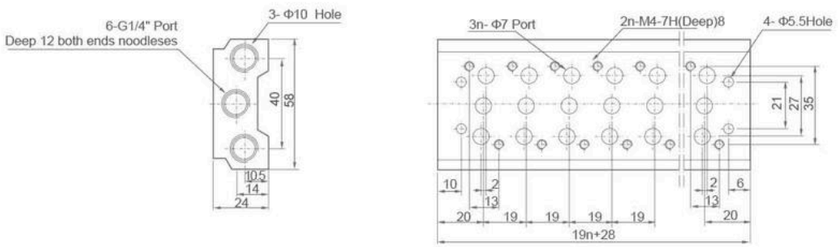

Blind plate for 4V、4A Series Valve



Ordering Code

4V、4A — 100M — B

Series Code
4V:For 4V Series Use
4A:For 4A Series Use

Specification Code
100M:For 100 Series Use
200M:For 200 Series Use
300M:For 300 Series Use
400M:For 400 Series Use

Blind Plate Code
B:Base Purposed Blind Plate

Blind plate Operating Instructions: When base quantity is more than solenoid (pneumatic) valve quantity, can use blind plate to seal the redundant valve base temporary, and then change it if add extra solenoid (pneumatic) valve. Like this can expand system.

Base For SY Series Valve



Ordering Code

SY3000M — **□F**

Series
SY3000M:For SY3 Series Use
SY5000M:For SY5 Series Use
SY7000M:For SY7 Series Use

Joint Base Number
SY3000M:Wantonly Joint
SY5000M:Wantonly Joint
SY7000M:Wantonly Joint

Overall Dimensions

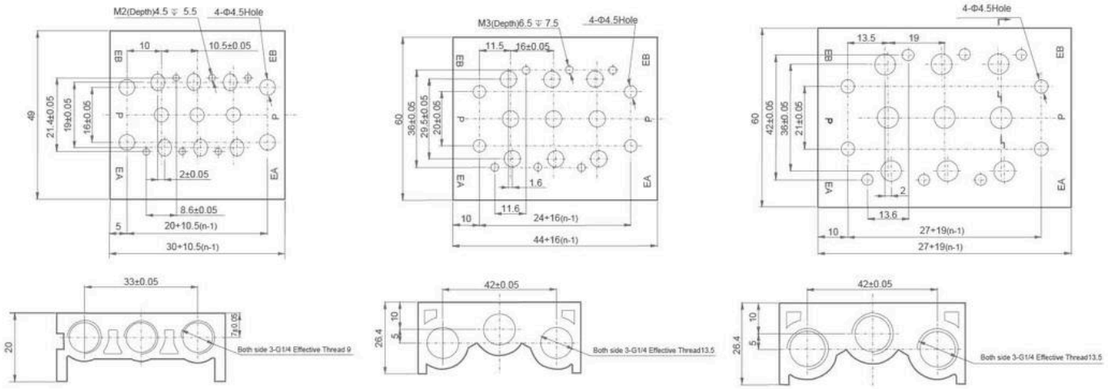

SY3000M SY5000M SY7000M

Base For 3V、3A Series Valve



Ordering Code

3V **100M** — **□F**

Series Code
3V:For 3V Series ues
3A:For 3A Series ues

Specification Code
100M:Base for 100 Series Use
200M:Base for 200 Series Use
300M:Base for 300 Series Use

Joint Base Number
100M:Wantonly Joint
200M:Wantonly Joint
300M:Wantonly Joint

Special Valve Base



■ Our company can customize all kinds of non-standard valve base accessories according to your drawing or sample.

Hand/Mechanical Valve

The valve is controlled by human or machine, to switch the direction of air flow. These valves included hand pull, hand draw, button control, rotary and foot valve. Body is made from aluminum, machining by CNC center. XCPC used the high grade of material and imported machine to make all the details perfect.



MSV Series Mechanical Valve



MSV86522-EB | MSV86522-PB | MSV86522-TB | MSV86522-LB | MSV86522-PP | MSV86522-PPL | MSV86522-R

Ordering Code

MSV	98	32	1	R

Specification Code
Mechanical Valve

Series Code
98 Series
86 Series

Position and Way No
32:Two-position Three-way
52:Two-position Five-way

Port Size
1:G1/8"
2:G1/4"

Button Type
Blank:Normal Type
R: Roller Type
TB:Selective Knob
LB:Strengthened Knob
PB:Large Round Button
PP:Plat Round Button
PPL:Convex Round Button
EB:With Lock Button

Specifcation

Model	MSV86321	MSV86522	MSV98322
Working Medium	40 Micron Filtered Air		
Position and Way No.	Two-position Three-way	Two-position Five-way	Two position Three-way
Effective Section Area	12mm² (CV=0.67)	16mm² (CV=0.89)	16mm² (CV=0.89)
Port Size	G1/8"	G1/4"	G1/4"
Pressure Range	0~0.8Mpa		
Temperature Range	0~60℃		

Overall Dimensions

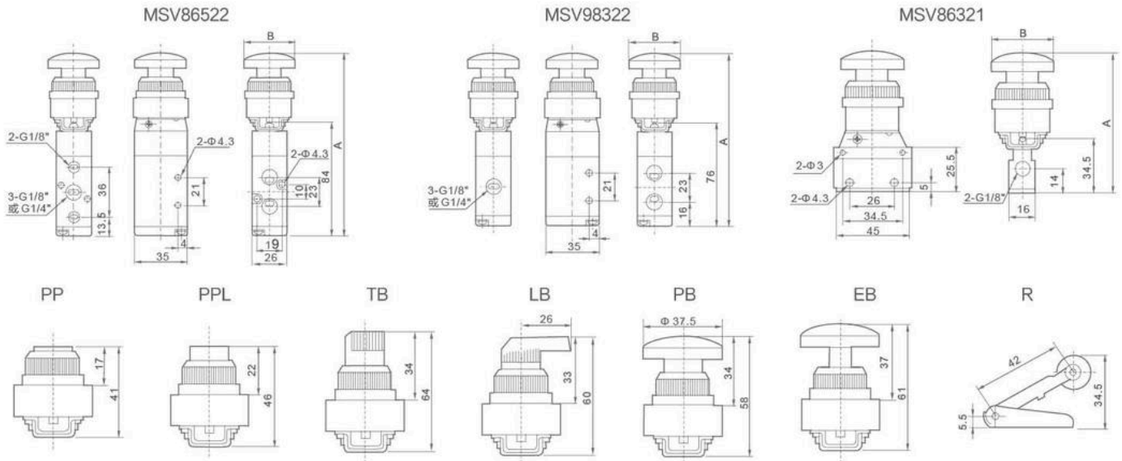

Dimension Sheet

Model	Symbol/Model	PP	PPL	LB	TB	EB	PB	R
MSV86522	A	114	119	133	136.5	134	131	107.5
	B	39.5	24.5	26.5	36.5	39.5	37.5	42.5
MSV98322	A	106	111	125	129.5	126	123	99.5
	B	39.5	24.5	26.5	36.5	39.5	37.5	42.5
MSV86321	A	66	71	85	88.5	86	83	59.5
	B	39.5	24.5	26.5	36.5	39.5	37.5	42.5

JMJ Series Mechanical Valve



JMJ-01 | JMJ-02 | JMJ-03 | JMJ-04 | JMJ-05 | JMJ-06 | JMJ-07

Ordering Code

JMJ	—	01

Specification Code
Joint Pipe Bore G1/4"Two-position Three-way Mechanical Valve

Button Type
01:Selective Knob
02:Strengthened Knob
03:With Lock Button
04:Large Round Button
05:Plat Round Button
06:Convex Round Button
07:Roller Type

Specifcation

Model	JMJ-01、02、03、04、05、06、07
Port Size	G1/4"
Working Medium	Air
Temperature Range	0~60℃
Pressure Range	0~1MPa
Effective Section Area	25mm²
Lubrication	Not Necessary

Overall Dimensions

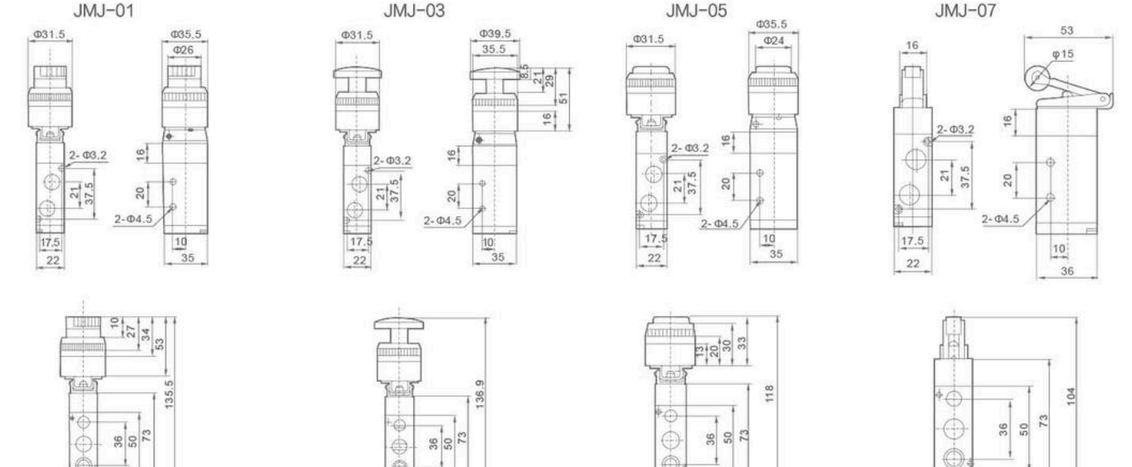

JM Series Mechanical Valve



JM-05 JM-06 JM-06A JM-07

Ordering Code

JM — 05

Specification Code
Stop-type Mechanical Valve

Button Type
05:Selective Knob
06:With Lock Button
06A:Convex Round Button
07:Roller Type

Specifcation

Model	JM-05	JM-06	JM-06A	JM-07
Working Medium	40 Micron Filtered Air			
Position and Way No.	Two-position Three-way,Two-position Two-way			
Port Size	G1/4"			
Working-pressure Range	0~0.8MPa			
Operating Temperature	0~60℃			

Dimension Sheet

Model	JM-05	JM-06	JM-06A	JM-07
A	114	111	96	84.5
B	36.5	39.5	39.5	42.5

Overall Dimensions

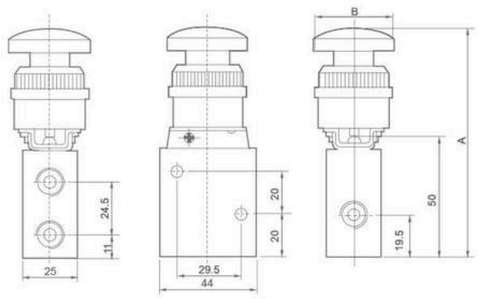

MOV Series Mechanical Valve



MOV-01 MOV-02 MOV-03 MOV-04

Ordering Code

MOV — 01

Specification Code
Machine-Control,
Hand-Control Valve

Button Type
01:Selective Knob
02:Roller Type
03:With Lock Button
04:Convex Round Button

Specifcation

Model	MOV-01	MOV-02	MOV-03	MOV-04
Working Medium	Air			
Position and Way No.	Two-position Two-way			
Port Size	G1/8"			
Working-pressure Range	0~0.8MPa			
Operating Temperature	0~70℃			

Overall Dimensions

MOV-02

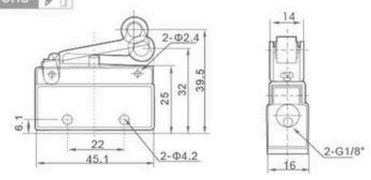

MOV-01

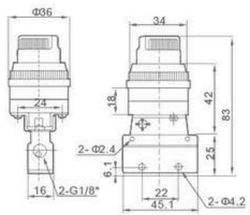

MOV-03

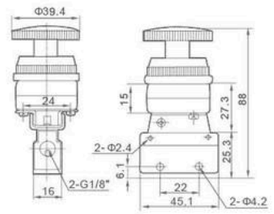

MOV-04

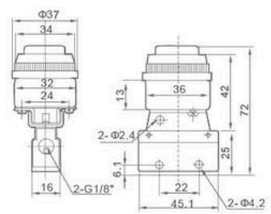

XS3 Series Meachanical Valve



XS3R-06 XS3D-06 XS3Y-06 XS3C-06 XS3PF-06 XS3PL-06 XS3HS-06 XS3PM-06

Ordering Code

S3 — PM — 06 — R

Specification Code
Two-Position
Three way Mechanical Valve

Button Type
B: Normal
C: Long Handle
D: Shoft Handle
Y: Rocjer
R: Roller lever
L: One way Roller lever
V:Vertical roller
PL: Park Rotation Button
PP: Convers Button
PF: Plat Button
PM: Large Round Button
HS: Selective Knob

Port Size
05: M5
06: PT1/8"
08: PT1/4"

Button Color

Specifcation	Button Color
PL Type	R:Red
PP Type/PF Type PM Type/HS Type	R:Red
	G:Green
	B:Black
Other Model	No

Specifcation

Model	S3B	S3C	S3D	S3V	S3R	S3L	S3Y	S3PM	S3PP	S3PF	S3PL	S3HS
Working Medium	Fittered 40μm Air											
Motion Pattern	External Direct Action Contorl											
Port Size	05： M5; 06: PT1/8"; 08: PT1/4"											
Effective Sectional Area	05:2.4mm²(Cv=0.45); 08:12.0mm²(Cv=0.67)											
Position and Way Area	Two-Position Three-Way											
Lubrication	Not required											
Working Pressure Resistance	0~0.8MPa											
Ensured Pressure Resistance	1.5MPa											
Working Temperature	-20~70℃											
Body Material	Aluminum Alllay											

XT Series Toggles Valve



XTAC-3P XTAC-4P XTAC-3V XTAC-4V XTAC-41P XTAC-41V XTAC2-41P+34C

3R/4R Series Hand-draw Valve



4R110-06



4R210-08



3R210-08

Ordering Code

4R		2		10		06
Specification Code		**Series Code**		**Number of Places**		**Port Size**
4R:Two-position Five-way Hand-draw Valve		100 Series		10:Single-head		06:G1/8"
3R:Two-position Three-way Hand-draw Valve		200 Series		Double-position		08:G1/4"
		300 Series				10:G3/8"
		400 Series				15:G1/2"

Specifcation

Model	4R110-06	4R210-08	4R310-10	4R410-15	3R110-06	3R210-08	3R310-10	3R410-15
Working Medium	Compresse Air							
Position and Way No.	Two-position Five-way				Two-position Three-way			
Joint Pipe Bore	G1/8"	G1/4"	G3/8"	G1/2"	G1/8"	G1/4"	G3/8"	G1/2"
Working-pressure Range	0~1.0MPa							
Operating Temperature Range	-5~60℃							
Operating Method	Direct Action Type							
Lubrication	Not Required							

Overall Dimensions

4R210-08

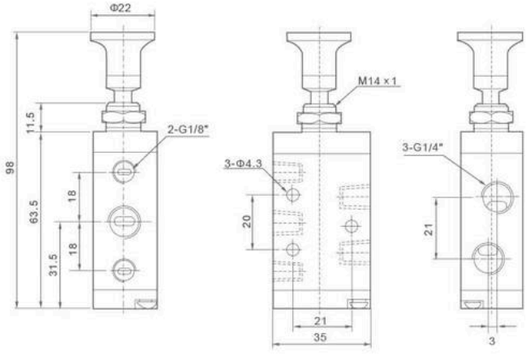

3R210-08

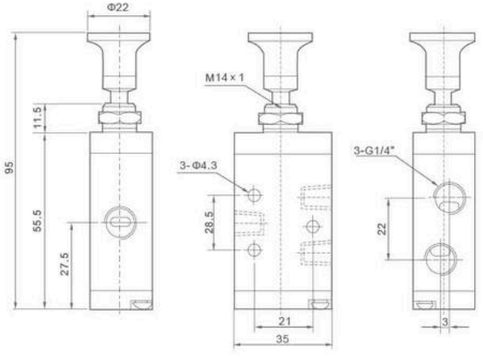

HV,K34 Series Hand-switching Valve



HV-03



K34R-08



K34-R-L8D



K34-R-L6D

Ordering Code

HV	—	02	□	K	—	34	R_8	L8	D
Series Code		**Port Size**	**Joint Pipe Type**	**Series Code**		**Position and way No.**	**Type Code**	**Port Size**	**Base Joint**
HV Series		02:G1/4"	Blank:Pipe Connection Type	K Series		24:Two-position Four-way	R_8:Hand-switching Valve	L6:G1/8"	
		03:G3/8"	B:Plate Connection Type			34:Three-position Four-way		L8:G1/4"	
		04:G1/2"							

Specifcation

Model	HV-02	HV-03	HV-04	$K34R_8$-L6	$K34R_8$-L8
Working Medium	40 Micron Filtered Air				
Effective Sectional Atea	$30mm^2$(cv+1.68)			$18mm^2$(cv+1.00)	
Port Size	G1/4"	G3/8"	G1/2"	G1/8"	G1/4"
Working-pressure Range	0~0.8MPa				
Operating Temperature Range	0~60℃				

Overall Dimensions

HV

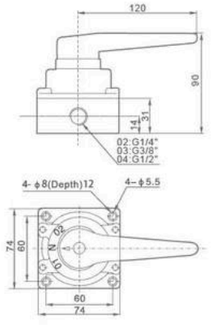

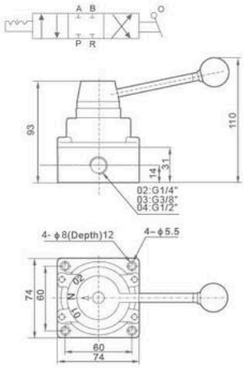

K34R-08

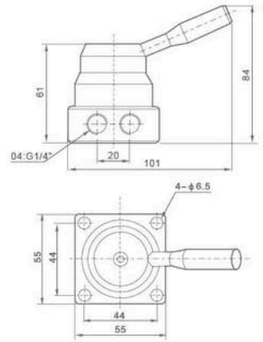

4HV Series Hand-switching Valve



4HV330-10

Ordering Code

4HV	—	230	—	08	—	T
Series		**Position and way No.**		**Port Size**		**Install Type**
4HV Series		230: Two-position Four-way		08: G1/4"		Blank: Body of Valve Install
		330: Three-position Four-way		10: G3/8"		T: Panel Install
				15: G1/2"		

TSV Series Hand-pull Valve



TSV86522-M



TSV98322-M

Ordering Code

TSV86	52	2	—	M	TSV98	32	2	—	M
Specification Code Hand-pull Valve	**Position and Way NO.** Two-position Five-way	**Port Size** 1:G1/8" 2:G1/4"		**Type Code** M:Machinery Locking Type S:Spring Return Type	**Specification Code** Hand-pull Valve	**Position and Way NO.** Two-position Three-way	**Port Size** 1:G1/8" 2:G1/4"		**Type Code** M:Machinery Locking Type S:Spring Return Type

Specifcation

Model	TSV86522M/S	TSV98322M/S
Working Medium	40 Micron Filtered Air	
Motion Pattern	Direct Drive Type	
Effective Sectional Area	18mm²(CV=1.00)	
Port Size	G1/4"	
Working-pressure Range	0~1.0MPa	
Operating Temperature Range	0~60℃	

Overall Dimensions

TSV86522



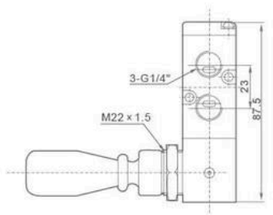

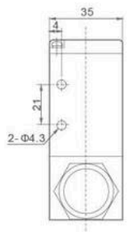

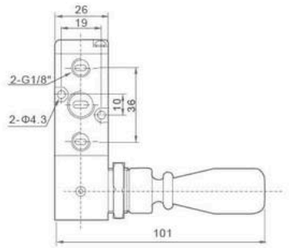

TSV98322



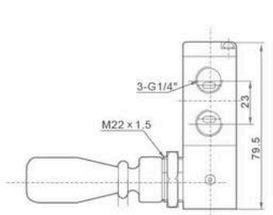

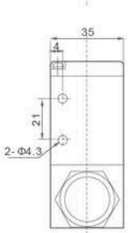

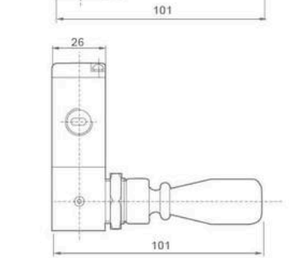

4H Series Hand-pull Valve



4H330-10



4H210-08

Ordering Code

4H	2	10	—	06	—	□
Specification Code 4H:Two(Three)-position Five-way Hand Pull Valve	**Positiom and way No** 2:200 Series 3:300 Series 4:400 Series	**Number of places** 10:Single-head Double-position 30:Single-head Three-position		**Port Size** 06:G1/8" 08:G1/4" 10:G3/8" 15:G1/2"		**Type Code** Blank:Two-Position Five-way lock type L:Three-Position Five-way lock type S:Two(Three)- Position Five-way spring return type

Specifcation

Model	4H210-06	4H210-08	4H230-08	4H310-08	4H310-10	4H330-10	4H410-15	4H430-15
Working Medium	40 Micron Filtered Air							
Motion Pattern	Direct Drive Type							
Effective Section Area	14mm²(CV=0.78)	16mm²(CV=0.89)	12mm²(CV=0.67)	25mm²(CV=1.4)	30mm²(CV=1.68)	30mm²(CV=1.68)	50mm²(CV=2.79)	50mm²(CV=2.79)
Port Size	Air Inlet=Air Outlet= Exhaust=G1/8"	Air Inlet=Air Outlet= Exhaust=G1/4"		Air Inlet=Air Outlet= Exhaust=G1/4"	Air Inlet=Air Outlet= G3/8" Exhaust=G1/4"		Air Inlet=Air Outlet= Exhaust=G1/2"	
Working-Pressure Range	0~1.0MPa							
Operating Temperature Range	0~60℃							

Overall Dimensions

4H Series

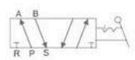

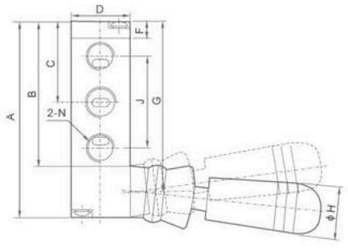

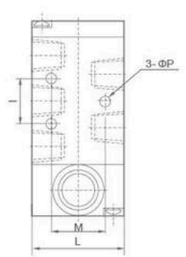

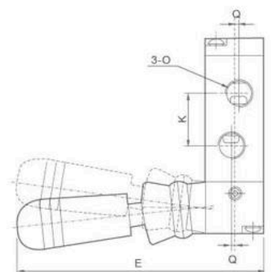

Dimension Sheet

Symbol/Model	A	B	C	D	E	F	G	H	I	J	K	L	M	N	O	P	Q
4H210-06	76.5	56.5	31.5	22	95	6.5	66.5	18	20	36	21	35	21	G1/8"	G1/8"	4.3	-
4H230-06	76.5	56.5	31.5	22	95	6.5	66.5	18	20	36	21	35	21	G1/8"	G1/8"	4.3	-
4H230-06(S)	97.5	75.5	31.5	22	95	6.5	85.5	18	20	36	21	35	21	G1/8"	G1/8"	4.3	-
4H210-08	76.6	56.5	31.5	22	95	6.5	66.5	18	20	36	21	35	21	G1/8"	G1/4"	4.3	1.5
4H230-08L	97.5	75.5	31.5	22	95	6.5	66.5	18	20	36	21	35	21	G1/8"	G1/4"	4.3	1.5
4H230-08(S)	97.5	75.5	31.5	22	95	6.5	85.5	18	20	36	21	35	21	G1/8"	G1/4"	4.3	1.5
4H310-08	92	72.5	40	27	100	7.5	82.5	18	24	45	24	40	27	G1/4"	G1/4"	4.3	-
4H310-10	92	72.5	40	27	100	7.5	52.5	18	24	45	24	40	27	G1/4"	G3/8"	4.3	2
4H410-15	126	102	55.5	34	100	7.5	114	18	28	63	36	50	35	G1/2"	G1/2"	5.5	-

4F、FV Series Foot Valve



4F210-08L



4F210-08



FV420



4F210-08LG

Ordering Code

4F	—	2	10	—	08	—	□
Specification Code 4F:Two-position Five-way Foot Valve		**Series Code** 2:200 Series	**Number of Places** 10:Single-head Double-position		**Port Size** 08:G1/4"		**Type Code** Blank:Standard Type L:With Lock G:With Cover LG:With Lock And Cover

FV	—	320
Specification Code FV:Foot Valve		**Position and way No** 320:Two-position Three-way 420:Two-position Four-way

Specifcation

Model	4F210-06	4F210-08L	4F210-08G	4F210-08LG	FV420	FV320
Working Medium	40 Micron Filtered Air					
Position and Way Number	Two-position Five-way				Two-position Four-way	Two-position Three-way
Motion Patten	Direct Drive Type					
Port Size	Air Inlet=Air Outlet=Exhaust=G1/4"				Air Inlet=Air Outlet=G1/4" Exhaust=G1/8"	
Working-pressure Range	0.15~0.9MPa					
Operating Temperature Range	0~60℃					

Overall Dimensions

4F210-08

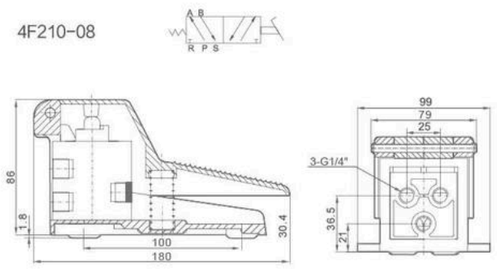

4F210-08L

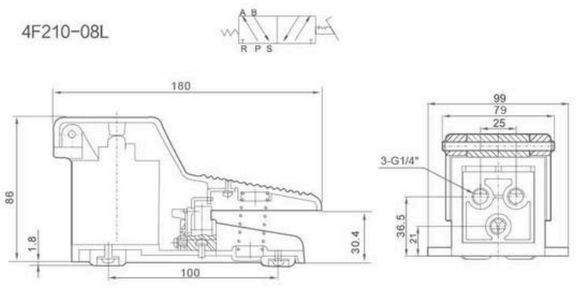

4F、FV Series Foot Valve

Overall Dimensions

4F210-08G

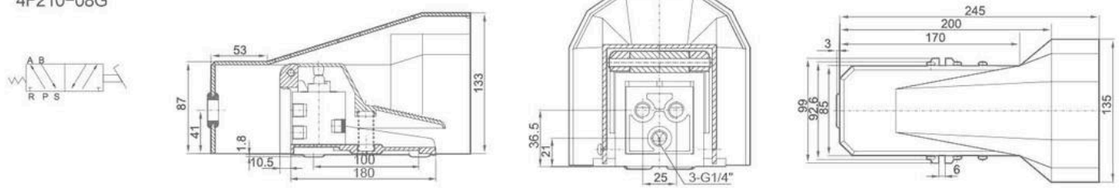

4F210-08LG

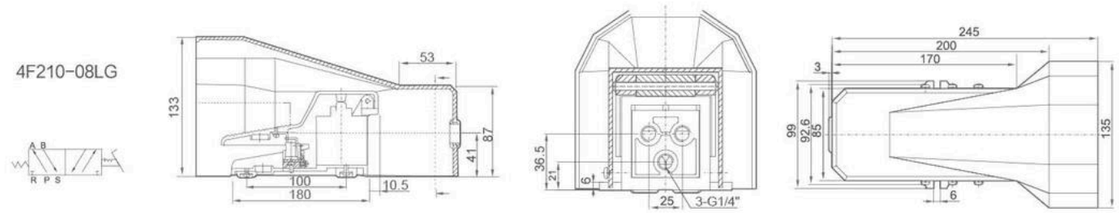

FV420

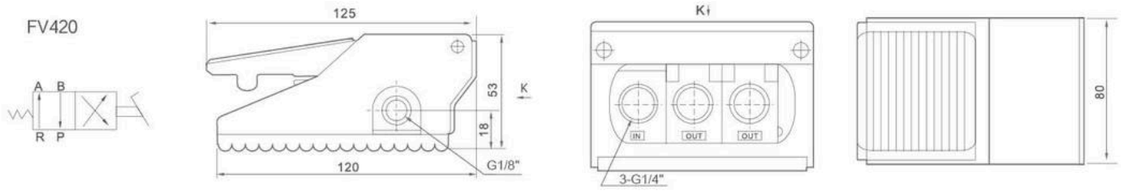

FV320

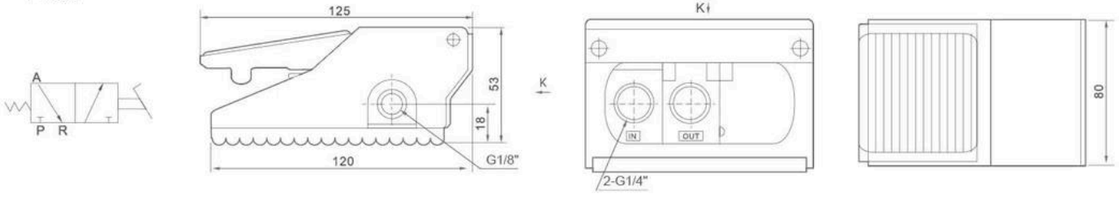

SK Series Foot Valve



SK25R7-08

Ordering Code

SK	23	R7	L8
Series Code	**Pisition and Way Number**	**Type Code**	**Potr Size**
Foot Valve	23: Two-position Three-way 25: Two-position Five-way	R7:Foot Type	L6:G1/8" L8:G1/4" L15:G1/2"

Specifcation

Model	SK25R7-L6	SK25R7-L8
Diameter	6mm	8mm
Working Medium	Compress Air	
Working Pressure:	0.05~0.8MPa	
Medium Temperature:	-10~55℃	
Enivironment Temperature:	-5-50℃	
Effective Sectional Area	10mm²	20mm²
Letting Out Amount	≤50 cm³/min	
Operating Power	≤80N	≤100N
Life(ten thousand)	≥200	

SH Series Manual Valve



SH-402

Ordering Code

SH	402	S
Series Code	**Port Size**	**Type Code**
Foot Valve	402: G1/4" 403: G3/8"	Blank:Immobility Type S:Spring Reset Type

Specifcation

Model	SH-402	SH-402S	SH-403	SH-403S
Working Medium	Air			
Working-pressure Range	0.15~0.9MPa			
Working-temperature Range	0~70℃			
Port Size	G1/4"		G3/8"	
Position Number	Two-position Five-way			

ST Series Foot Valve



ST-402

Ordering Code

ST	402	S
Series Code	**Port Size**	**Type Code**
Foot Valve	402: G1/4" 403: G3/8"	Blank:Immobility Type S:Spring Reset Type

Specifcation

Model	ST-402	ST-402S	ST-403	ST-403S
Working Medium	Air			
Working-pressure Range	0.15~0.9MPa			
Working-temperature Range	0~70℃			
Port Size	G1/4"		G3/8"	
Position Number	Two-position Five-way			

RE Series Flow Control Valve



RE-02

Ordering Code

RE	—	01
Series Code		**Port Size**
RE:Ordinary Type Flow Control Valve		01:G1/8" 02:G1/4" 03:G3/8" 04:G1/2"

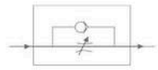

Graphic Symbol

Specifcation

Model	RE-01	RE-02	RE-03	RE-04
Port Size	G1/8"	G1/4"	G3/8"	G1/2"
Working Medium	Air			
Working-pressure Range	0~0.95MPa			
Operating Temperature Range	0~60℃			

Overall Dimensions

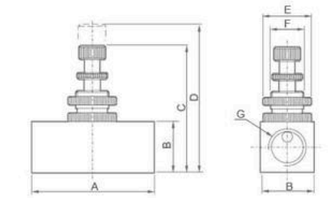

Dimension Sheet

Model	A	B	C	D	E	F	G
RE-01	45	19	43	50	Φ19	M14×1	G1/8
RE-02	45	19	43	50	Φ19	M14×1	G1/4
RE-03	55	25	55	62	Φ25	M18×1	G3/8
RE-04	55	25	55	62	Φ25	M18×1	G1/2

ASC Series Accurate Type Flow Control Valve



ASC-06

Ordering Code

ASC	—	08
Series Code		**Port Size**
ASC:Accurate Type Flow Control Valve		06:G1/8" 08:G1/4" 10:G3/8" 15:G1/2"



Graphic Symbol

Specifcation

Model	ASC-06	ASC-08	ASC-10	ASC-15
Port Size	G1/8"	G1/4"	G3/8"	G1/2"
Working Medium	Air			
Working-pressure Range	0~0.95MPa			
Operating Temperature Range	0~60℃			

Overall Dimensions

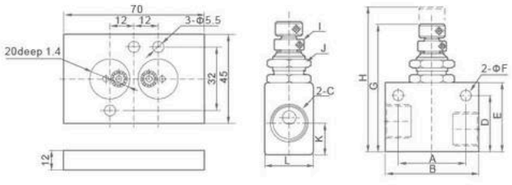

Dimension Sheet

Model	A	B	C	D	E	F	G	H	I	J	K	L
ASC-06	22	32	G1/8	22	27	4.3	49.7	56.5	M6×0.5	M12×0.75	12	18
ASC-08	26	36	G1/4	22	27	4.3	49.7	56.5	M6×0.5	M12×0.75	12	18
ASC-10	28	40	G3/8	25	30	4.3	52.7	59.5	M6×0.5	M12×0.75	13	22
ASC-15	28	40	G1/2	30	35	4.3	58.7	65.5	M6×0.5	M12×0.75	13.5	26

KLA Series Check Valve



KLA−06

Ordering Code

KLA — 10

Series
KLA:Check Valve

Port Size
06:G1/8"
08:G1/4"
10:G3/8"
15:G1/2"
20:G3/4"
25:G1"

Graphic Symbol

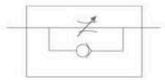

Specifcation

Model		KLA-06	KLA-08	KLA-10	KLA-15
Working Medium		Air			
Port Size		G1/8"	G1/4"	G3/8"	G1/2"
Working-pressure Range		0.5~0.95 Kgf/cm^2			
Ensured Pressure Resistance		15.0 Kgf/cm^2			
Operating Temperature Range		-5~60℃			
Body of Material		Aluminum Alloy			
Standard Rated Flow(L/min)	Check Valve	200	450	1250	1650
	One-way Valve	400	800	1500	2000

Overall Dimensions

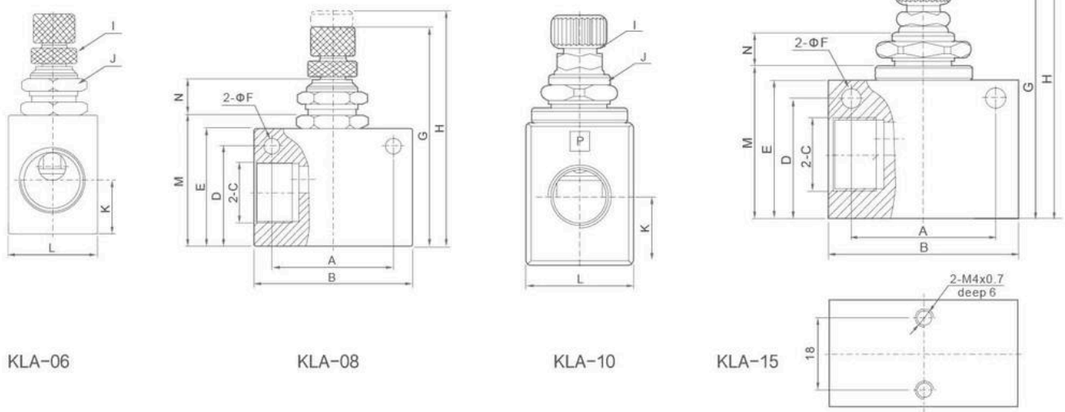

KLA−06 KLA−08 KLA−10 KLA−15

Dimension Sheet

Model	A	B	C	D	E	F	G	H	I	J	K	L	M	N
KLA-06	22	32	PT1/8	18	23	4.3	46.8	52.3	M6×0.5	M12×0.75	10	18	26	8.6
KLA-08	26	36	PT1/4	23	27	4.3	50.8	56.3	M6×0.5	M12×0.75	13.5	18	30	8.6
KLA-10	35	50	G3/8	37	37	5.3	65	74	M8×0.75	M16×1	17.5	28	40.5	10.2
KLA-15	35	50	G1/2	32	37	5.3	65	74	M8×0.75	M16×1	17.5	28	40.5	10.2

KA Series Check Valve



KA−08

Ordering Code

KA — L8

Series
KA:Check Valve

Port Size
L06:G1/8"
L08:G1/4"
L10:G3/8"
L15:G1/2"
L20:G3/4"
L25:G1"
L32:G1-1/4"
L40:G1-1/2"
L50:G2"

Graphic Symbol

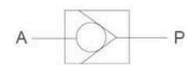

Product instruction

The valve is undirectional control element.When passing the valve,the working medium can only flow along a given direction.In operation,when the medium pressure direction changed,the valve functions to stop the return of the medium in the system.Therefore,the product is also called non-return valve.

Specifcation

Model	KA-L06	KA-L08	KA-L10	KA-L15	KA-L20	KA-L25	KA-L32	KA-L40	KA-L50
Working-pressure	0.05~0.8MPa								
Environment Temperature	-10~+55℃								
Medium Temperature	0~+55℃								
Circulating Ability	10	20	40	60	110	190	300	400	650
Startup Ability	≤0.03MPa								
Leak Out Flow(cm3/min)	50	50	120	120	250	250	500	500	500
Respond Time(Sec)	0.03								
Life(Ten Thousand Times)	≥150								

Overall Dimensions

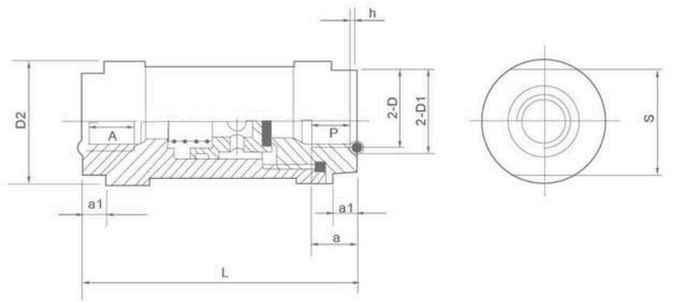

Dimension Sheet

Model	Joint Pipe Code	D	D1	D2	S	L	a	a1	h
KA-L06	6	G1/8 M10×1	Φ13	Φ28	24	64	10	6	$1.4^{\ 0}_{-0.1}$
KA-L08	8	G1/4 M12×1.5	Φ16	Φ28	24	64	12	6	$1.4^{\ 0}_{-0.1}$
KA-L10	10	G3/8 M16×1.5	Φ20	Φ40	36	86	14	10	$1.8^{\ 0}_{-0.1}$
KA-L15	15	G1/2 M20×1.5	Φ26	Φ40	36	86	14	10	$1.8^{\ 0}_{-0.1}$
KA-L20	20	G3/4 M27×2	Φ32	Φ55	46	112	21	12	$1.8^{\ 0}_{-0.1}$
KA-L25	25	G1 M33×2	Φ40	Φ55	46	112	23	12	$2.7^{\ 0}_{-0.1}$
KA-L32	32	G1-1/4 M42×2	Φ48	Φ88	75	161	25	22	$2.7^{\ 0}_{-0.1}$
KA-L40	40	G1-1/2 M48×2	Φ54	Φ88	75	161	26	26	$2.7^{\ 0}_{-0.12}$
KA-L50	50	G2 M60×2	Φ70	Φ100	90	95	26	26	$4.5^{\ 0}_{-0.18}$

KAM Series Check Valve



KAM-08

Ordering Code

KAM — 15

Series Code
KAM: Check Valve

Port Size
06:G1/8"
08:G1/4"
10:G3/8"
15:G1/2"

Specifcation

Model	KAM-06	KAM-08	KAM-10	KAM-15
Port Size	G1/8"	G1/4"	G3/8"	G1/2"
Flow mm^2/S	10	20	40	60
Leak Out Flow(cm^2/min)	≤45	≤60	≤80	≤95
Operation Medium	Compressed Air			
Working Temperature Range	-5~60℃			
Working Pressure	0.05~1.2MPa			

Overall Dimensions

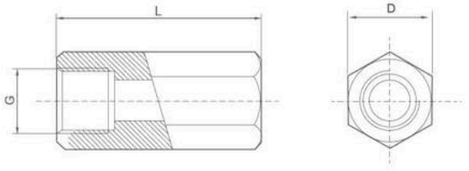

Dimension Sheet

Model	G	L	D
KAM-06	G1/8"	37	14
KAM-08	G1/4"	48	17
KAM-10	G3/8"	50	21
KAM-15	G1/2"	60	24

AS Series Check Valve



AS4000-02

Ordering Code

AS — 4000 — 02

Series Code
AS:Check Valve

Specification Code
4000

Port Size
02:G1/4"
03:G3/8"
04:G1/2"

Graphic Symbol



Specifcation

Model		AS4000-02	AS4000-03	AS4000-04
Port Size		G1/4"	G3/8"	G1/2"
Free Flow	Flow(L/min)	1670		
	Effective Sectional Area(mm^2)	25.5		
Controlled Flow	Flow(L/min)	1670		
	Effective Sectional Area(mm^2)	25.5		
Ensured Pressure Resistance		1.5MPa		
Highest Working Pressure		1.0MPa		
Lowest Working Pressure		0.05MPa		
Ambient and Media Temperature		5~60℃		
Regulated Flow Turns		8~9		

Note*:Input pressure is 0.5MPa.
Note*:8 turns for AS4000

Overall Dimensions

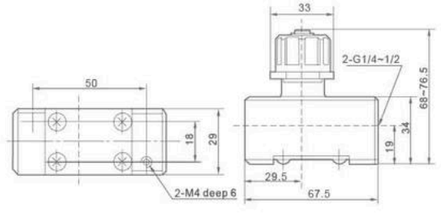

AS4000

XQ Series Quick Exhaust Valve



XQ170800

The valve is generally installed on the pipeline between the cylinder and reversal valve and near the cylinder, which directly discharge the air from cylinder without passing the reversal valve and thusto achieve the goal of fast reversion of cylinder.The effect on improving cylinder speed is especially obvious.
P: Connect reversal valve export
A: Connect cylinder
R: Connect muffler

Graphic Symbol

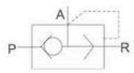

Ordering Code

XQ — 170800

Series
XQ:Quick Exhaust Valve

Port Size
170600:G1/8"
170800:G1/4"
171000:G3/8"
171500:G1/2"
172000:G3/4"

Specifcation

Model	XQ170600	Xq170800	XQ171000	XQ171500
Joint Threaded	G1/8"	G1/4"	G3/8"	G1/2"
Port Size	6mm	6mm	8mm	15mm
Flow	≥0.9m^3/min	≥0.9m^3/min	≥2.5m^3/min	≥4.5m^3/min
Timerate(Ten Thousand Times)	≤200			
Working Pressure Range	0.12~1.0MPa			
Exchange Times(S)	≤0.03	≤0.03	≤0.04	≤0.05

Overall Dimensions

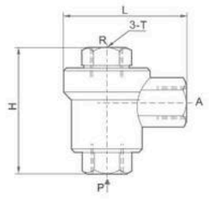

Dimension Sheet

Model	T	H	L
XQ170600	G1/8"	39	32
XQ170800	G1/4"	51	45
XQ171000	G3/8"	68	62
XQ171500	G1/2"	77	86

QE Series Quick Exhaust Valve



QE-02

Ordering Code

QE — 01

Series Code
QE:Quick Exhaust Valve

Port Size
01:G1/8" 02:G1/4"
03:G3/8" 04:G1/2"
06:G3/4"

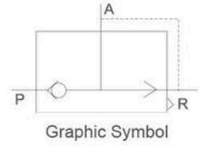

Graphic Symbol

Specifcation

Model	QE-01	QE-02	QE-03	QE-04	QE-06
Port Size	G1/8"	G1/4"	G3/8"	G1/2"	G3/4"
Effective Section Area	16mm^2	27.5mm^2	38mm^2	71mm^2	72.5mm^2
Working Medium	Air				
Working Pressure Range	0~1.0MPa				
Operating Temperature Range	0~60℃				

Overall Dimensions

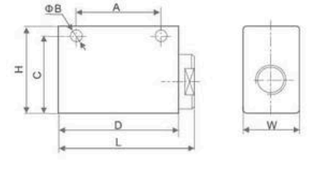

Dimension Sheet

Model	Bore	L	W	H	A	B	C	D
QE-01	G1/8"	46	20	32	30	4.3	27	40
QE-02	G1/4"	62	25	40	39	5.6	33.5	55
QE-03	G3/8"	62	25	40	39	5.6	33.5	55
QE-04	G1/2"	98	38	64	60	8.5	51	90
QE-06	G3/4"	98	38	64	60	8.5	51	90

XKP Series Quick Exhaust Valve



XKP-L6

Ordering Code

XKP — L15

Series Code
XKP:Quick Exhaust Valve

Port Size
L6:G1/8"
L8:G1/4"
L10:G3/8"
L15:G1/2"
L20:G3/4"
L25:G1"
L32:G1-1/4"
L40:G1-1/2"
L50:G2"

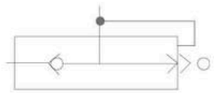

Graphic Symbol

Specifcation

Model		XKP-L6	XKP-L08	XKP-L10	XKP-L15	XKP-L20	XKP-L25	XKP-L32	XKP-L40	XKP-L50
Section Area	P→A	10	20	40	60	1100	190	300	400	650
	A→□	20	40	60	110	190	300	400	650	900
Leak Out Flow(cm^3/min)		≤10		≤25		≤50			≤70	
Working Medium		Compressed Air								
Operating Temperature Range		-5~60℃								
Working-pressure		0.05~1.2MPa								

Overall Dimensions

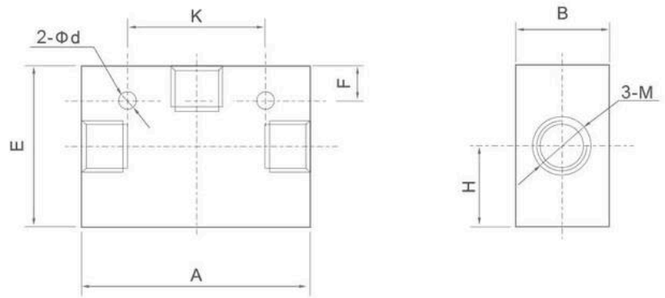

Dimension Sheet

Model	M	A	K	B	E	H	F	d
XKP-L6	G1/8"	75	-	36	41	10	-	-
XKP-L8	G1/4"							
XKP-L10	G3/8"	82	58	44	60	23	8	7
XKP-L15	G1/2"							
XKP-L20	G3/4"	128	98	72	95	36	8	10
XKP-L25	G1"							
XKP-L32	G11/4"	158	126	88	112	44	10	10
XKP-L40	G11/2"							
XKP-L50	G2"	190	148	102	130	52	10	12

XST Series Shuttle Valve



XST-02

Ordering Code

XST — 01

Series Code
XST:Shuttle Valve

Port Size
01:G1/8"
02:G1/4"
03:G3/8"
04:G1/2"
06:G3/4"
08:G1"

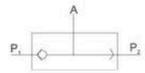

Graphic Symbol

Specifcation

Model	XST-01	XST-02	XST-03	XST-04	XST-06	XST-08
Working Medium	Air					
Effective Section Area	7.5mm^2	21mm^2	40mm^2	60mm^2	110mm^2	190mm^2
Port Size	G1/8"	G1/4"	G3/8"	G1/2"	G3/4"	G1"
Working Pressure Range	0~1.0MPa					
Operating Temperature Range	-5~60℃					

Overall Dimensions

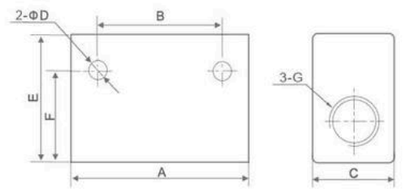

Dimension Sheet

Model	A	B	C	D	E	F	G
XST-01	40	24	16	4.5	25	20.5	G1/8"
XST-02	50	35	22	5.5	35	25	G1/4"
XST-03	75	48	30	7	50	42	G3/8"
XST-04	75	48	30	7	50	42	G1/2"
XST-06	110	72	40	7	70	58	G3/4"
XST-08	110	72	40	7	70	58	G1"

CV Series Vacuum Valve



CV-15L

Ordering Code

CV — 15L

Series Code
CV:Vacuum Valve

Port Size
10L:G1/8"
15L:G1/4"
20L:G3/8"

Specifcation

Model	CV-10L	CV-15L	CV-20L
Working Medium	Air		
Working pressure	1.0MPa		
Shortest Excitation Time	0.05 Second		
Leakage Volume	≤10cm^3/min		

Overall Dimensions

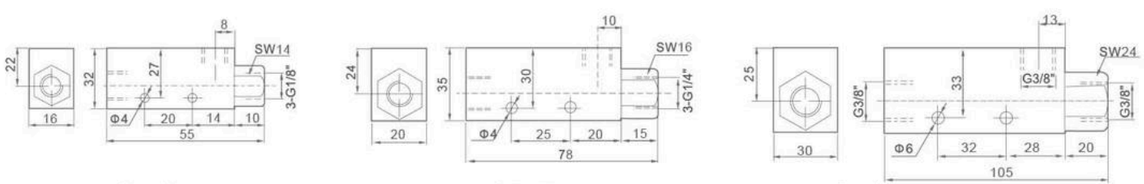

CV-10L　　CV-15L　　CV-20L

HSV Series Hand Sliding Valve



HSV-01FM HSV-03

Ordering Code

HSV 03 □

Series Code
HSV:Hand Sliding Valve

Port Size
01:G1/8"
02:G1/4"
03:G3/8"
04:G1/2"
06:G3/4"

Port Form
Blank:Two Side Inner Thread
FM:One Side Inner Thread and One Side Outer Thread
FF:Two Side Outer Thread

Graphic Symbol

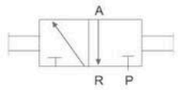

This valve is a two-position three-way hand sliding valve,which is usually installed in the piping to turn on/off airs.When it is turned off,the air pressure in the pneumatic system is exhausted simultaneously.

Specifcation

Model	HSV-01	HSV-02	HSV-03	HSV-04	HSV-06
Port Size	G1/8"	G1/4"	G3/8"	G1/2"	G3/4"
Flow Bore	4mm	7mm	10mm	12mm	18mm
Working Medium	Filtered Air				
Working-pressure	0~1.0MPa				
Ambient Temperature Range	5~60℃				
Working Force	20N				30N

Overall Dimensions

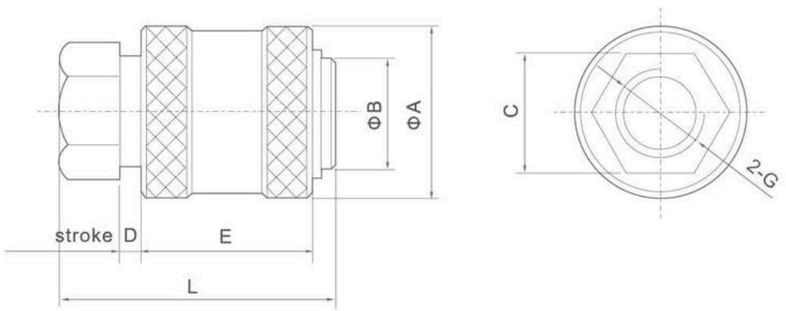

Dimension Sheet

Model	A	B	C	D	E	L	G
HSV-01	20	13	14	3	20	32	G1/8"
HSV-02	27	18	19	5	32	48	G1/4"
HSV-03	30	21	22	5	32	48	G3/8"
HSV-04	38	24	27	10	40	70	G1/2"
HSV-06	45	32	34	10	45	75	G3/4"

MQ Series Precision Flow Control Valve

NEW!



MQ-M5

Ordering Code

MQ M5

Series Code
MQ:Precision Flow Control Valve

Port Size
M5:M5


XCPC®

2 Position 2 Way Solenoid Valves

This kind of valve widely used in wide different industry, you can find the valve with different material like brass, stainless steel, engineering plastic, and they are used for pressure range from 0 to 50 bar, temperature from -10 °C to 180°C. If there is no current models with your meet, please contact us, we are available to provide specialized valves according to your requirement.

General Information About Solenoid Valve

Inner structure and categories of two way solenoid valves

Direct acting solenoid valves

Including normal close style (N.C.) and normal open style(N.O.). The N.C. style solenoid valve stay close at power off condition. When poweron, the coil yields electricity-magnetic force, which exceed the spring force and hence pulls active armature approaching to static armature, the valve becomes open; when power off, the electricity-magnetic force disappear and the active armature go back to its original place by the spring force, the valve close. The N.O. style is just opposite. These valve are normally simple structure, dependable action, fast response, high, frequency and with ≤6mm small orifice size(N.O. style ≤4mm).

Diaphragm pilot solenoid valves

This style valve makes main valve and pilot valve together, when power on, the coil yields electricity-magnetic force pulls active armature approaching to static armature, the pilot valve open and control the main valve to open; when power off, the electricity-magnetic force disappear and with the gravity and spring force, the active armature close the pilot valve, which control the main valve to close. The N.O. style is just opposite.These valve are normally with bigger orifice size and ≤10Bar working pressure and with zero differential working pressure.

Piston pilot solenoid valves

Similar with piston pilot solenoid valves, but supports for higher pressure and temperature,with ≥1 Bar differential working pressure.

Seal Features

Material / Medium / Applicability	NBR	HNBR	EPDM	VMQ	FKM	PTFE	PU
Highest working temperature	80℃	120℃	120℃	180℃	120℃	200℃	80℃
Lowest working temperature	-5℃	-10℃	-20℃	-40℃	-20℃	-50℃	-20℃
Anti-burning	×	×	×	△	◎	◎	△
Steam	×	△	◎	○	△	○	×
Oil	◎	◎	×	△	◎	◎	◎
O_3	△	◎	◎	◎	◎	◎	◎
Chemical	△	○	◎	◎	◎	◎	◎
Acid	△	○	◎	△	◎	◎	×
Alkality	○	◎	◎	△	◎	◎	×
Water	○	○	◎	○	○	◎	◎
Wearing	○	◎	○	×	○	◎	◎
Anti distortion	○	○	○	◎	○	×	×
Tension	◎	◎	◎	×	○	×	◎

Description of the symbol: ◎ Very good ○ Good △Normal level × Not OK

General Information About Solenoid Valve

Part LIst



No	Designation
1	Valve body
2	O-ring
3	Seal pad
4	Pilot
5	Spring
6	Armature
7	Coil
8	Steel washer
9	Washer
10	Spring washer
11	Nut

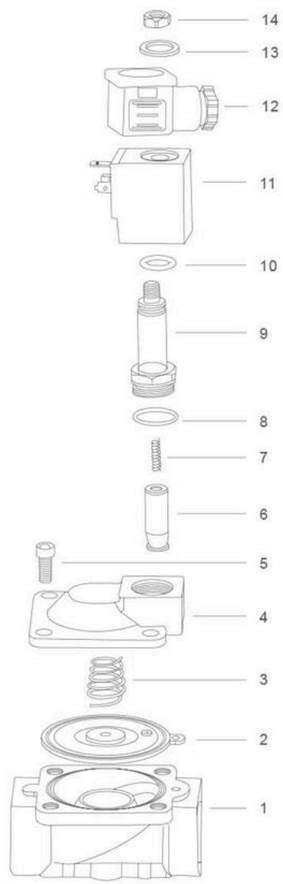

No	Designation
1	Valve body
2	Diaphragm
3	Diaphragm spring
4	Valve cover
5	Hexagon screw
6	Pilot units
7	Plunger Spring
8	O-ring
9	Plunger tube assembly
10	O-ring
11	Coil
12	Connector
13	Gasket
14	Lock Nut

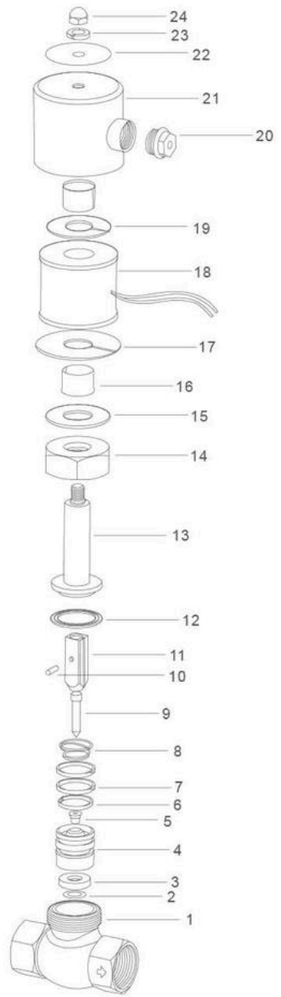

No	Designation	No	Designation
1	Valve body	13	Static armature
2	Washer	14	Nut
3	Seal pad	15	Gasket
4	Valve core	16	Bushing
5	Seal	17	Steel plate
6	Gasket	18	Coil
7	Guide ring	19	Steel plate
8	Spring	20	Nut
9	Valve needle	21	Steel cover
10	Pin	22	Min plate
11	Armature	23	Spring washer
12	Seal ring	24	Nut

2V Series 2/2 Solenoid Valve



Ordering Code

2V	025	06	—	AC220V	—	V

Specification Code
2V:Two-positionTwo-way Solenoid Valve

Aperture of Flow Rate
025:2.5mm
130:13mm
250:25mm

Port Size
06:G1/8"
08:G1/4"
10:G3/8"
15:G1/2"
20:G3/4"
25:G1"

Standard Voltage
DC12V
DC24V
AC24V 50Hz/60Hz
AC110V 50Hz/60Hz
AC220V 50Hz/60Hz
AC380V 50Hz/60Hz

Oil Seal Code
Blank:NBR
V:VITON(For High temperature)

Graphic Symbol



Specifcation

Model	2V025-06	2V025-08	2V130-10	2V130-15	2V250-20	2V250-25
Working Medium	Air,Water,Oil					
Motion Pattern	Direct Drive Type		Guide Type			
Type	Normal Close Type					
Aperture of Flow Rate(mm)	2.5		13		25	
CV Value	0.23		6.2		23	
Port Size	G1/8"	G1/4"	G3/8"	G1/2"	G3/4"	G1"
Operation Fluid Viscosity	20 CST (Below)					
Working-pressure	Air,Water,Oil 0~0.8MPa		Air,Water,Oil 0.05~0.7MPa			
Max. Pressure Resistance	12kgf/cm^2		10.5kgf/cm^2			
Operating Temperature Range	-10~+80℃					
Voltage Range	±10%					
Protect Class	IP65					
Power Consumption	AC:7VA860Hz PC:6W					
Insulation	F Class					
Material of Body	Aluminum or Brass		Brass			
Material of Oil Seal	NBR or VITON		NBR			
Shortest Excitation Time	0.05 Second					

Internal structure

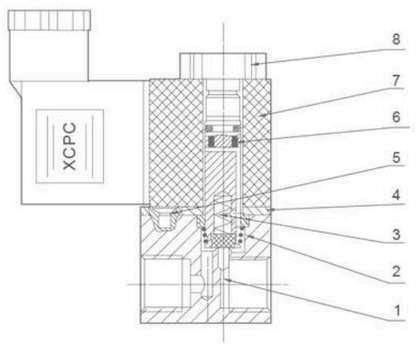

No	Name
1	Body Of Valve
2	Spring
3	Assembly Of Iron Core
4	Assembly Of Iron Core
5	Cruciform Slot Screw
6	Platen
7	Coil
8	Nut

2V Series 2/2 Solenoid Valve

Internal structure

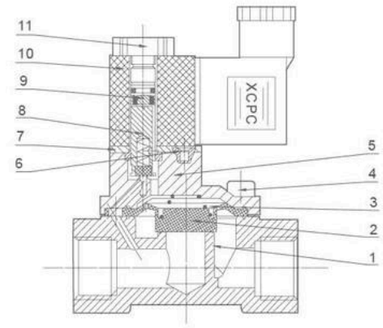

No	Name
1	Body Of Valve
2	Diaphragm
3	Spring
4	Socket Hexagon Screws
5	Cover board
6	Cruciform Slot Screw
7	Platen
8	Assembly Of Iron Core
9	Assembly Of Iron Core
10	Coil
11	Nut

Overall Dimensions

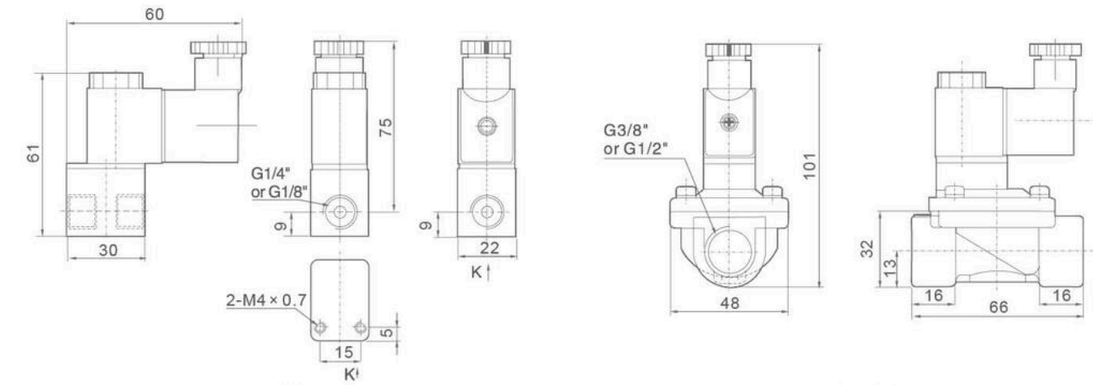

2V025

2V130

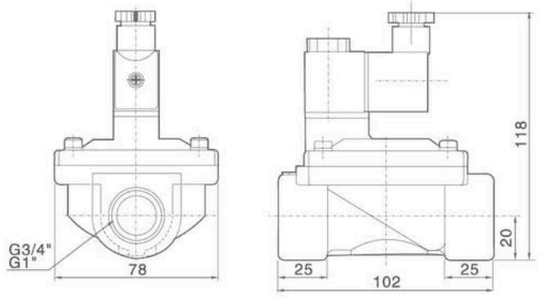

2V250

2P Series 2/2 Solenoid Valve (Plastic Steel Type)



Ordering Code

2P — 025 — 06 — AC220V — □

Specification Code
2P:Two-position Two-way Solenoid Valve (Reinforced plastic steel type)

Aperture of Flow Rate
025:2.5mm

Port Size
06:G1/8"
08:G1/4"

Standard Voltage
DC12V DC24V
AC24V 50Hz/60Hz
AC110V 50Hz/60Hz
AC220V 50Hz/60Hz
AC380V 50Hz/60Hz

Wiring Form
Blank:Lead wire Type
D: Joint Connector

Graphic Symbol

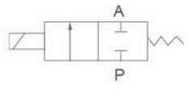

Specifcation

Model	2V025-06	2V025-08
Working Medium	Air,Water,Oil,gas	
Motion Pattern	Direct Drive Type	
Type	Normal Close Type	
Aperture of Flow Rate(mm)	2.5	
CV Value	0.23	
Port Size	G1/8"	G1/4"
Operation Fluid Viscosity	20 CST (Below)	
Working-pressure	0~0.7MPa	
Max. Pressure Resistance	1.0MPa	
Operating Temperature Range	-5~+80℃	
Voltage Range	±10%	
Material of Body	Engineering Plastic Steel	
Material of Oil Seal	NBR EPDM or VITON	

Overall Dimensions

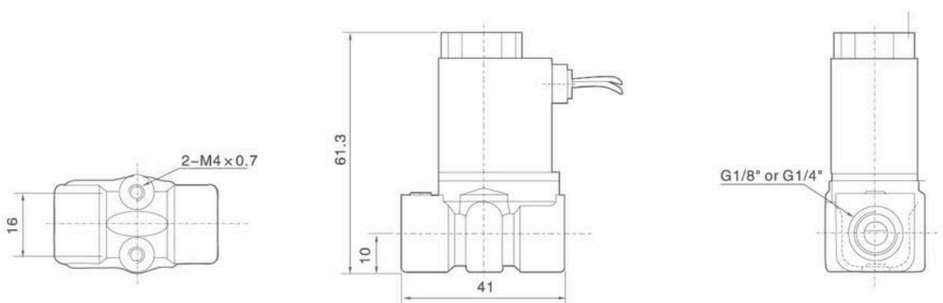

2W(UD) Series 2/2 Direct Drive Type Solenoid Valve (Small Aperture)





Graphic Symbol

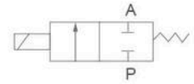

Ordering Code

2W — 025 — 08 — F — AC220V — □

Specification Code
2W:Two-position Two-way solenoid valve direct drive type
2WH:Two-position Two-way solenoid valve(High pressure direct drive Type)

Aperture of Flow Rate
012:1.2mm
020:2.0mm
025:2.5mm
040:4.0mm

Port Size
06:G1/8"
08:G1/4"
10:G3/8"

Initial Estate
Blank:Pipe Jiont Ttype
F: Flange Type

Standard Voltage
DC12V DC24V
AC24V 50Hz/60Hz
AC36V 50Hz/60Hz
AC110V 50Hz/60Hz
AC220V 50Hz/60Hz
AC380V 50Hz/60Hz

Wiring Form
Blank:Lead Wire Type
D:Joint Connector
E:Blast-proof Coil
G:Water-proof Coil

Specifcation

Model	2W025-06	2W025-08	2W040-10	2WH012-06	2WH012-08	2WH020-10
Working Medium	Air,Water,Oil,Gas					
Motion Pattern	Direct Drive Type					
Type	Normal Close Type					
Aperture of Flow Rate(mm)	2.5		4	1.2		2
CV Value	0.23		0.60	0.05		0.15
Port Size	G1/8"	G1/4"	G3/8"	G1/8"	G1/4"	G3/8"
Operation Fluid Viscosity	20 CST (Below)					
Working-pressure	Air,Water,Oil,Gas:0~0.7MPa			Air,Water,Oil:0~2.0MPa		
Max. Pressure Resistance	1.0			3.5		
Operating Temperature Range	-5~+80℃					
Voltage Range	±10%					
Material of Body	Brass					
Material of Oil Seal	NBR EPDM or VITON					

2W(UD) Aperture 2/2 Direct Drive Type Solenoid Valve(Small Aperture)

Internal structure

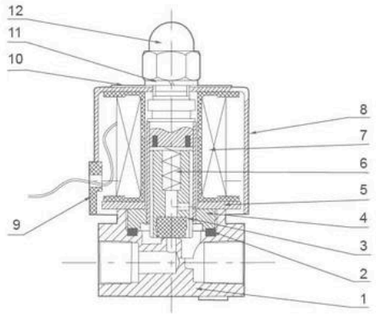

No	Name
1	Body Of Valve
2	O-ring
3	Assembly Of Iron Core
4	Assembly Of Iron Core
5	Magnetic Plate
6	Spring
7	Assembly Of Coil
8	Iron Cover
9	Cord-locks
10	Name Plate
11	Gasket
12	Head Cover Nut

Overall Dimensions

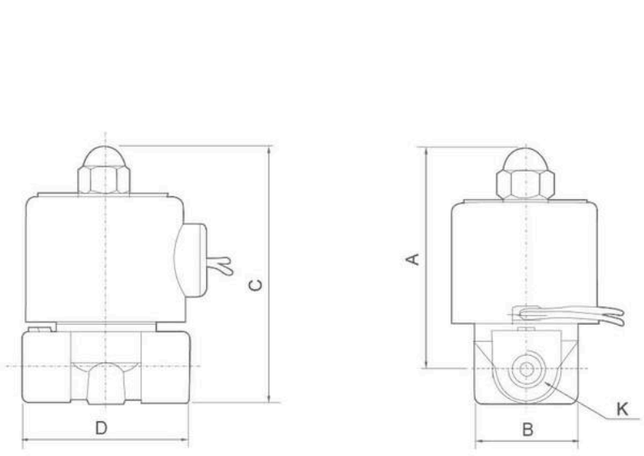

Dimension Sheet

Symbol/Model	A	B	C	D	K(PT)
2W025-06	66	30.3	75	41.5	G1/8"
2W025-08	66	30.3	75	41.5	G1/4"
2W040-10	74	32.2	85.5	53	G3/8"
2WH012-06	66	30.3	75	40.5	G1/8"
2WH012-08	66	30.3	75	40.5	G1/4"
2WH020-10	74	32.3	85.5	53	G3/8"

2W(UW) Series 2/2 Direct Drive Type Solenoid Valve(Large Aperture)





Graphic Symbol

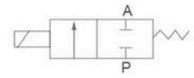

Ordering Code

2W — **160** — **15** — **F** — **AC220V** — □

Specification Code
2W:Two-position two-way solenoid valve (direct drive type)

Aperture of Flow Rate
160:16mm
200:20mm
250:25mm
350:35mm
500:50mm

Port Size
10:G3/8"
15:G1/2"
20:G3/4"
25:G1"
35:G11/4"
40:G11/2"
50:G2"

Initial Estate
Blank:Pipe Jiont Type
F: Flange Type

Standard Voltage
DC12V DC24V
AC24V 50Hz/60Hz
AC36V 50Hz/60Hz
AC110V 50Hz/60Hz
AC220V 50Hz/60Hz
AC380V 50Hz/60Hz

Wiring Form
Brlank:Lead Wire Type
D: Joint Connector

Specifcation

Model	2W160-10	2W160-15	2W200-20	2W250-25	2W350-35	2W400-40	2W500-50
Working Medium	Air,Water,Oil,gas						
Motion Pattern	Direct Drive Type						
Type	Normal Close Type						
Aperture of Flow Rate(mm)	16		20	25	35	40	50
CV Value	4.8		7.6	12	24	29	48
Port Size	G3/8"	G1/2"	G3/4"	G1"	G1¼"	G1½"	G2"
Operation Fluid Viscosity	20 CST (Below)						
Working-pressure	Air:0~0.7MPa Water:0~0.5MPa Oil:0~0.5MPa Gas: 0~0.7MPa						
Max. Pressure Resistance	1.0MPa						
Operating Temperature Range	-5~+80℃						
Voltage Range	±10%						
Material of Body	Brass						
Material of Oil Seal	NBR EPDM or VITON						

2W(UW) Series 2/2 Direct Drive Type Solenoid Valve(Large Aperture)

Internal structure

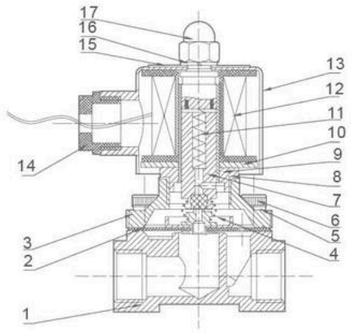

NO	Name	NO	Name
1	Body Of Valve	10	Magnetic Plate
2	Assembly Of Diaphragm	11	Spring
3	Valve Cover	12	Assembly Of Coil
4	Pull Spring	13	Iron Cover
5	Gasket	14	Cord-locks
6	Socket Hexagon Screws	15	Name Plate
7	Assembly Of Iron Core	16	Gasket
8	Seal Gasket	17	Head Cover Nut
9	Assembly Of Iron Core		

Overall Dimensions

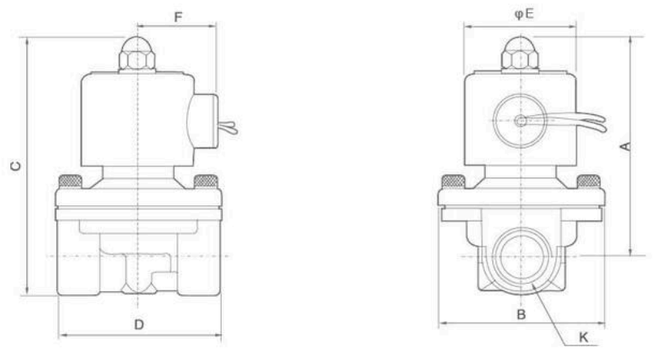

2W(Large Aperture)

Dimension Sheet

Model	A	B	C	D	E	F	K
2W160-10	101.5	57	117	67	50	36	G3/8"
2W160-15	101.5	57	117	67	50	36	G1/2"
2W200-20	107	57	123.5	72	50	36	G3/4"
2W250-25	111.5	73.5	134.5	92	50	36	G1"
2W350-35	142	95	172	125	70.5	56	G1¼"
2W400-40	142	95	172	125	70.5	56	G1½"
2W500-50	172	123	209	168	70.5	56	G2"

2S Series Stainless Steel Solenoid Valve





Graphic Symbol

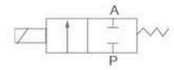

Ordering Code

2S — 025 — 08 — F — AC220V — □

Specification Code
2S:Two-position two-way solenoid valve (Stainless steel direct drive type)

Aperture of Flow Rate
025:2.5mm
040:4.0mm
160:16mm
200:20mm
250:25mm
350:35mm
400:40mm
500:50mm

Port Size
08:G1/4"
10:G3/8"
15:G1/2"
20:G3/4"
25:G1"
35:G1¼"
40:G1½"
50:G2"

Initial Estate
Blank:Pipe Jiont type
F: Flange Type

Standard Voltage
DC12V DC24V
AC24V 50Hz/60Hz
AC36V 50Hz/60Hz
AC110V 50Hz/60Hz
AC220V 50Hz/60Hz
AC380V 50Hz/60Hz

Wiring Form
Blank:Lead Wire Type
D:Joint Connector
E:Blast-proof Coil
G:Water-proof Coil

Specifcation

Model	2S025-06(08)	2S040-10	2S160-10(15)	2S200-20	2S250-25	2S350-35(40)	2S500-50
Working Medium	Air,Water,Oil,Gas						
Motion Pattern	Direct Drive Type						
Type	Normal Close Type						
Aperture of Flow Rate(mm)	2.5	5	16	20	35	40	50
CV Value	0.23	0.60	4.8	7.6	24	29	48
Port Size	G1/8" G1/4"	G3/8"	G3/8" G1/2"	G3/4"	G1"	G1¼" G1½"	G2"
Operation Fluid Viscosity	20 CST (Below)						
Working-pressure	Air:0~0.7MPa		Water:0~0.5MPa, Air:0~0.7MPa, Oil:0~0.5MPa, Gas:0~0.7MPa				
Max. Pressure Resistance	1.05MPa						
Operating Temperature Range	-5~+80℃						
Voltage Range	±10%						
Material of Body	Stainless steel						
Material of Oil Seal	NBR EPDM or VITON						

Note:2S Series Solenoid Valve's Oevrall Dimension, Flow Chart and Inner Structure all Same as 2W Series.

2W/2S Normal Open Series Solenoid Valve





Graphic Symbol

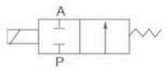

Ordering Code

2W	160	—	10	NO	—	AC220V	—	□

Specification Code
2W:Two-position two-way solenoid valve (direct drive type)
2S:Stainless steel two position two way solenoid valve(direct drive type)

Aperture of Flow Rate
040:4.0mm
160:16mm
200:20mm
250:25mm

Port Size
10:G3/8"
15:G1/2"
20:G3/4"
25:G1"

Initial Estate
NO: Normal Open

Standard Voltage
DC12V DC24V
AC24V 50Hz/60Hz
AC36V 50Hz/60Hz
AC110V 50Hz/60Hz
AC220V 50Hz/60Hz
AC380V 50Hz/60Hz

Wiring Form
Blank:Lead Wire Type
D:Joint Connector
E:Blast-proof Coil
G:Water-proof Coil

Specifcation

Model	2W/2S(040-10NO)	2W/2S(160-10NO)	2W/2S(160-15NO)	2W/2S(200-20NO)	2W/2S(250-25NO)
Working Medium	Air,Water,Oil,Gas				
Motion Pattern	Direct Drive Type				
Type	Normal Open Type				
Aperture of Flow Rate(mm)	4	16	16	20	25
CV Value	0.6	4.8	4.8	7.6	12
Port Size	G3/8"	G3/8"	G1/2"	G3/4"	G1
Operation Fluid Viscosity	20 CST (Below)				
Working-pressure	Water:0~0.5MPa Air:0~0.7MPa Oil:0~0.5MPa Gas: 0~0.7MPa				
Max. Pressure Resistance	1.05MPa				
Operating Temperature Range	-5~+80℃				
Voltage Range	±10%				
Material of Body	2W: Brass; 2S: Stainless steel				
Material of Oil Seal	NBR EPDM or VITON				

Overall Dimensions

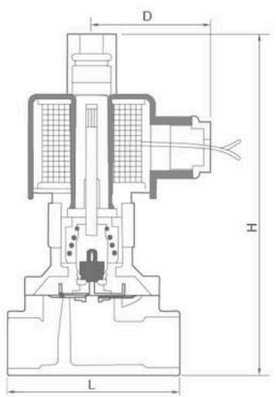

Dimension Sheet

Model	L	H	D
2W040-10NO	53	105	54
2W160-10NO	69	116	62
2W160-15NO	69	116	62
2W200-20NO	73	127	62
2W250-25NO	99	135	62

2L(US) Series 2/2 Solenoid Valve



Ordering Code

2L	170	—	15	—	AC220V

Specification Code
2L:Steam Type Two-position Two-way Solenoid Valve

Aperture of Flow Rate
170:17mm
200:22mm
300:30mm
500:50mm

Port Size
10:G3/8"
15:G1/2"
20:G3/4"
25:G1"
35:G1¼"
40:G1½"
50:G2"

Standard Voltage
DC12V DC24V
AC24V 50Hz/60Hz
AC36V 50Hz/60Hz
AC110V 50Hz/60Hz
AC220V 50Hz/60Hz
AC380V 50Hz/60Hz

Graphic Symbol

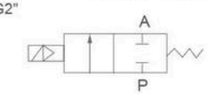

Specifcation

Model	2L170-10	2L170-15	2L170-20	2L200-25	2L300-35	2L300-40	2L500-50
Working Medium	Air, Water, Steam						
Motion Pattern	Guide Type						
Type	Normal Close Type						
Aperture of Flow Rate(mm)	17			22	30		50
CV Value	4.8			12	20		48
Port Size	G3/8"	G1/2"	G3/4"	G1"	G1¼"	G1½"	G2"
Operation Fluid Viscosity	20 CST(Below)						
Working-pressure	Air, Water, Steam:0.1~1.5MPa						
Max. Pressure Resistance	2.25MPa						
Operating Temperature Range	-5~+180℃						
Voltage Range	±10%						
Material of Body	Brass						
Material of Oil Seal	PTFE						

Internal structure

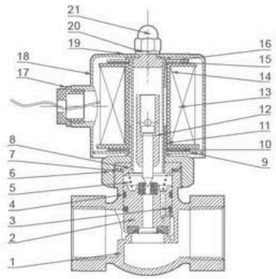

No	Name	No	Name	No	Name
1	Body Of Valve	8	Assembly of Iron Core	15	Gasket
2	Assembly Of Piston	9	Magnetic Plate	16	Magnetic Plate
3	Springiness Spacer	10	Gasket	17	Cord-locks
4	Wear Strip	11	Bush	18	Iron Cover
5	Spring	12	Assembly Of Iron Core	19	Name Plate
6	Nut	13	Assembly Of Coil	21	Gasket
7	O-ring	14	Bush	21	Head Cover Nut

Overall Dimensions

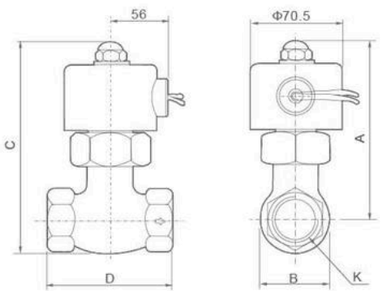

Dimension Sheet

Model	A	B	C	D	K
2L170-10	125	38	146	76	G3/8"
2L170-15	125	42	146	81	G1/2"
2L170-20	125	47	146	84	G3/4"
2L200-25	136	54	162	91.5	G1"
2L300-35	148	76	185	111	G1¼"
2L300-40	148	76	185	111	G1½"
2L500-50	176	88	223	164	G2"

PU220 Series 2/2 Solenoid Valve(Direct Drive Type)





Graphic Symbol

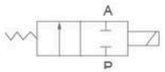

Ordering Code

PU	220	—	02	—	A	AC220V	—	T

Specification Code
PU:Two -position
Two -way solenoid valve

Motion Pattem
220:Direct Drive Type

Port Size
01:G1/8" 02:G1/4"
03:G3/8" 04:G1/2"
06:G3/4" 08:G1"
12:G1 1/4" 14:G1 1/2"
20:G2"

Initial Estate
A: Large Flux
AR: Small Aperture Direct Drive
F: Flange Type

Standard Voltage
AC220V
AC110V
DC12V
DC24V

Wiring Form
Blank:Standard Coil
T:Timer Coil

Specifcation

Model	PU220-01AR	PU220-02AR	PU220-03AR	PU220-03A	PU220-04AR	PU220-04A	PU220-06A	PU220-08A
Working Medium	Air, Water, Oil							
Motion Pattern	220:Direct Drive Type/225:Guide Type							
Type	Normal Close Type							
Aperture of Flow Rate(mm)	1.5	2.3	8	13	8	13	20	25
CV Value	0.10	0.18	1.00	4.00	1.00	4.00	8.60	11.00
Joint Pipe Bore	G1/8"	G1/4"	G3/8"	G3/8"	G1/2"	G1/2"	G3/4"	G1"
Operation Fluid Viscosity	50 CST							
Working-pressure	0~0.7MPa							
Max. Pressure Resistance	1.05MPa							
Operating Temperature Range	-5~+80℃							

Internal structure

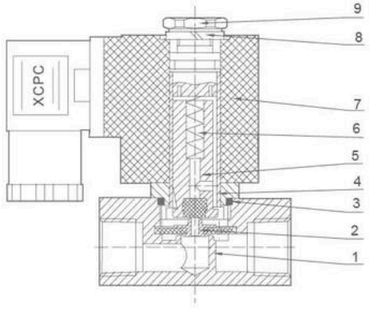

NO	Name
1	Body Of Valve
2	Assembly of Diaphragm
3	O-ring
4	Assembly Of Iron Core
5	Assembly Of Iron Core
6	Spring
7	Coil
8	Gasket
9	Nut

PU220 Series 2/2 Solenoid Valve(Direct Drive Type)

Internal structure

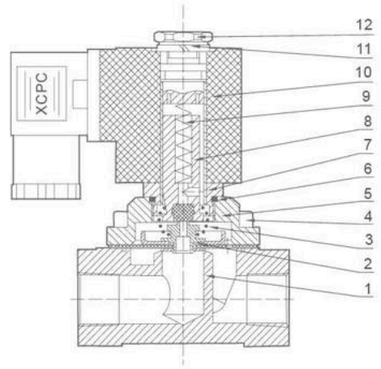

No	Name	No	Name
1	Body Of Valve	7	Assembly Of Iron Core
2	Assembly Of Diaphragm	8	Assembly Of Iron Core
3	Pull Spring	9	Spring
4	Socket Hexagon Screws	10	Coil
5	Valve Cover	11	Gasket
6	O-ring	12	Nut

Overall Dimensions

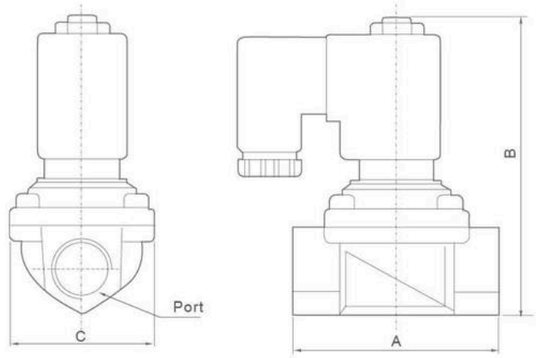

Dimension Sheet

Model	Port	A	B	C
PU220-01AR	G1/8"	22	72	22
PU220-02AR	G1/4"	35	72	25.4
PU220-03AR	G3/8"	55	79.5	30
PU220-03A	G3/8"	65.5	101	48
PU220-04A	G1/2"	65.5	101	48
PU220-06A	G3/4"	71	107	58
PU220-08A	G1"	97	120	70

PU 225 Series 2/2 Solenoid Valve(Guide Type)



Ordering Code

PU	225	—	03	—	A	AC220V	—	T

Specification Code
PU:Two-position two-way solenoid valve
SPU: Stainless steel two-position two-way solenoid valve

Motion Pattern
225:GuideType

Port Size
03:G3/8"
04:G1/2"
06:G3/4"
08:G1"
12:G1¼"
14:G1½"
20:G2"

Initial Estate
A: Standard Type
F: Flange Type

Standard Voltage
AC220V
AC110V
DC12V
DC24V

Wiring Form
Blank:Standard Coil
T: Timer Coil

Graphic Symbol

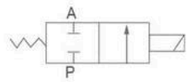

Specifcation

Model	PU225-03A / SPU225-03A	PU225-04A / SPU225-04A	PU225-06A / SPU225-06A	PU225-08A / SPU225-08A	PU225-12A / SPU225-12A	PU225-14A / SPU225-14A	PU225-20A
Working Medium	Air,Water,Oil						
Motion Pattern	Guide Type						
Type	Normal Close Type						
Aperture of Flow Rate(mm)	13	13	25	25	38	38	50
CV Value	4.50	4.50	12.00	12.00	22.00	30.00	48.00
Port Size	G3/8"	G1/2"	G3/4"	G1"	G1¼"	G1½"	G2"
Operation Fluid Viscosity	50 CST (Below)						
Working-pressure	0.05~1.0MPa						
Max. Pressure Resistance	1.5MPa						
Operating Temperature Range	-5~+80℃						
Material of Body	Brass or steel						

Overall Dimensions

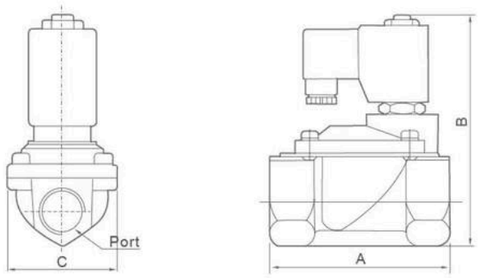

Dimension Sheet

Model	Port	A	B	C
PU225-03A / SPU225-03A	G3/8"	66.5	106.5	48.0
PU225-04A / SPU225-04A	G1/2"	66.5	106.5	48.0
PU225-06A / SPU225-06A	G3/4"	72.0	113.0	58.0
PU225-08A / SPU225-08A	G1"	96.0	121.0	70.0
PU225-12A / SPU225-12A	G1¼"	128.0	145.5	96.0
PU225-14A / SPU225-14A	G1½"	128.0	145.5	96.0
PU225-20A	G2"	161.0	160.5	112.0

PU 225 Series Solenoid Valve(Steam Type)



Ordering Code

PU	225	—	03	—	S	AC110V

Specification Code
PU:Two-position two-way solenoid valve

Motion Pattern
225:GuideType

Port Size
03:G3/8"
04:G1/2"
06:G3/4"
08:G1"

Initial Estate
S: Steam Type

Standard Voltage
AC230V AC110V
DC12V DC24V

Graphic Symbol

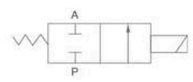

Specifcation

Model	PU225-03S	PU225-04S	PU225-06S	PU225-08S
Working Medium	Air, Water, Oil			
Motion Pattern	Guide Type			
Type	Normal Close Type			
Aperture of Flow Rate(mm)	13	13	25	25
CV Value	4.50	4.50	12.00	12.00
Port Size	G3/8"	G1/2"	G3/4"	G1"
Operation Fluid Viscosity	50 CST			
Working-pressure	0.05~1.0MPa			
Max. Pressure Resistance	1.5MPa			
Operating Temperature Range	-10~+185℃			

Overall Dimensions

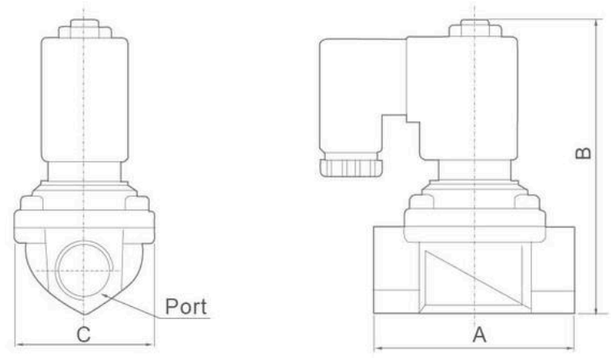

Dimension Sheet

Model	Port	A	B	C
PU225-03S	G3/8"	65	121	48
PU225-04S	G1/2"	65	121	48
PU225-06S	G3/4"	97	152	70
PU225-08S	G1"	97	152	70

VX Series 2/2 Solenoid Valve



Ordering Code

VX2120 — 08 — AC220V

Specification Code

Port Size
06:G1/8"
08:G1/4"
10:G3/8"
15:G1/2"

Standard Voltage
DC12V DC24V
AC24V 50Hz/60Hz
AC110V 50Hz/60Hz
AC220V 50Hz/60Hz
AC380V 50Hz/60Hz

Graphic Symbol

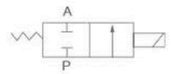

Specifcation

Model	VX2120-06	VX2120-08	VX2120-10	VX2120-15
Working Medium	Air, Water, Steam			
Motion Pattern	Direct Drive Type			
Type	Normal Close Type			
Working-pressure	0~1.0MPa			
Aperture of Flow Rate(mm)	3		10	13
Port Size	G1/8"	G1/4"	G3/8"	G1/2"
Operating Temperature Range	-5~+150℃		-5~+80℃	
Material of Oil Seal	VITON		NBR	

Internal structure

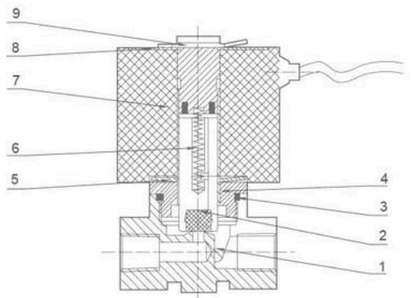

No	Name
1	Body Of Valve
2	Assembly Of Iron Core
3	O-ring
4	Assembly Of Iron Core
5	Spring
6	Spring
7	Coil
8	Name Plate
9	Clip

Overall Dimensions

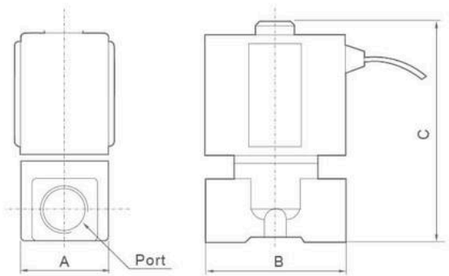

Dimension Sheet

Model	Port	A	B	C
VX2120-06	G1/8"	26	40	66
VX2120-08	G1/4"	26	40	66
VX2120-10	G3/8"	40	48	80
VX2120-15	G1/2"	47	66	88

VXF Series Solenoid Valve



Ordering Code

VXF2150 — 06 — AC220V — □

Specification Code

Port Size
06:G3/4"
10:G1"
14:G1 1/2"

Standard Voltage
DC12V DC24V
AC24V 50Hz/60Hz
AC36V 50Hz/60Hz
AC110V 50Hz/60Hz
AC220V 50Hz/60Hz
AC380V 50Hz/60Hz

Wiring Form
Blank:Lead Wire Type
D:Joint Connector

Graphic Symbol

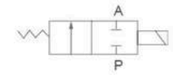

Specifcation

Model	VXF2150-06	VX2160-10	VX2280-14
Port Size	G3/4"	G1"	G1 1/2"
Max. Operating Differential Pressure	1.0MPa		
Min.Operating Differential Pressure	0.031MPa		
Section (mm)	20	27	40
Effective Area of Section	170	330	810
CV Value	9.5	18.5	45
Exhaust Orifice	Rc(PT)1/4		

Overall Dimensions

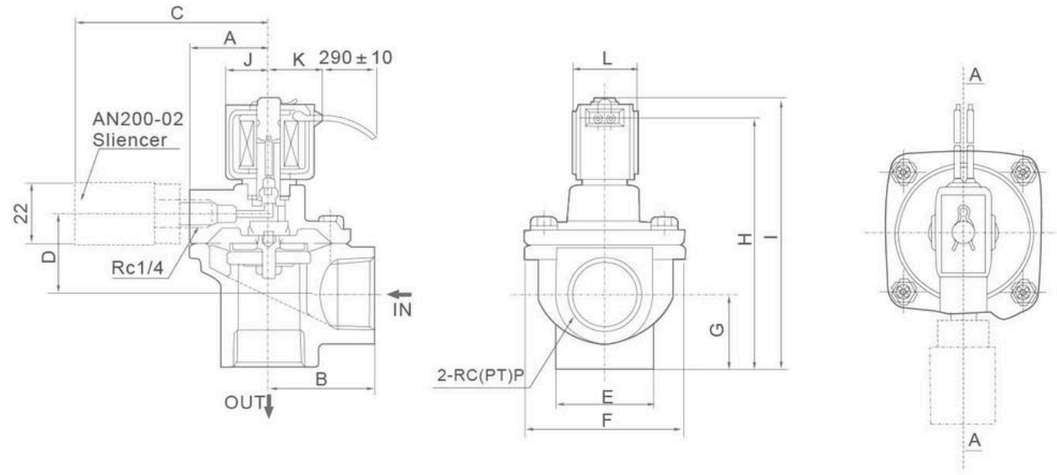

Dimension Sheet

Model	A	B	C	D	E	F	G	H	I	J	K	L	P
VXF2150	33	40	85	32.5	36	66	25	103	110	20	23	30	G3/4"
VXF2160	37	48	89	38	45	74	33.5	118	125	20	23	30	G1
VXF2280	28	68	81	58	110	110	62.5	174	184	23	25	35	G1-1/2"

XC22/23 Series Solenoid Valve





Graphic Symbol

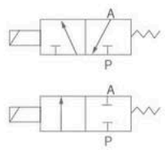

Ordering Code

XC	23	—	06	—	AC220V
Factory Code	The Position counting 22:Two position two way 23:Two position three way		Port Size 06:G1/8" 08:G1/4"		Standard Voltage DC12V DC24V AC24V 50/60Hz AC36V 50/60Hz AC110V 50/60Hz AC220V 50/60Hz AC380V 50/60Hz

Specifcation

Model	XC22-06		XC22-08		XC23-06	XC23-08
Working Medium	Air, Water, Oil				Air	
Aperture of Flow Rate(mm)	1.6	2.4	3.2	4.0	1.6	
CV Value	0.10	0.21	0.33	0.43	0.1	
Port size	G1/8"		G1/4"		G1/8"	G1/4"
Working-pressure Range	0~1.5	0~1.0	0~0.7	0~0.5	0~0.9	
Voltage Range	±10%					
Material of oil seal	NBR or VITON					

Overall Dimensions

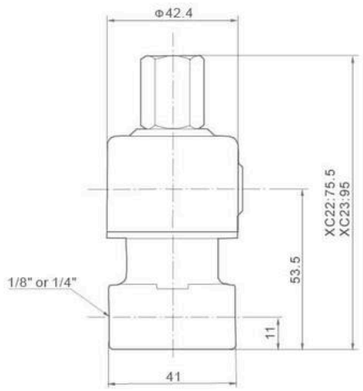

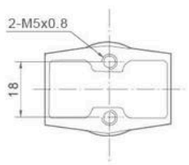

XC5404 Series High Pressure,High Temperature Solenoid Valve



Ordering Code

XC	5404	—	04	—	AC220V	—	□
Factory Code	Model		Port Size 02:G1/4" 04:G1/2" 06:G3/4" 08:G1"		Standard Voltage DC12V DC24V AC24V 50/60Hz AC36V 50/60Hz AC110V 50/60Hz AC220V 50/60Hz AC380V 50/60Hz		Wiring Form Blank:Lead Wire Type D:Joint Connector

Graphic Symbol

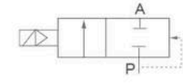

Specifcation

Model	XC5404-04	XC5404-06	XC5404-08
Working Medium	Air, Water, Oil		
Motion Pattern	Guide Type		
Type	Normal Close Type		
Aperture of Flow Rate(mm)	12	25	25
KV Value	2.0	5.0	10.0
Joint Pipe Bore	G1/2"	G3/4"	G1"
Working-pressure(kgf/cm^2)	Gas:1~50,Liquid:1~50	Gas:1~40,Liquid:1~25	Gas:1~40, Liquid:1~25
Max. Pressure Resistance(kgf/cm^2)	75	60	
Operating Temperature Range(℃)	-5~+150℃		
Voltage Range	±10%		
Protect Class	IP65		
Power Consumption	AC:5.5VA DC:9W		
Insulation	F Class		
Material of Body	Brass		
Material of Oil Seal	PTFE		

Overall Dimensions

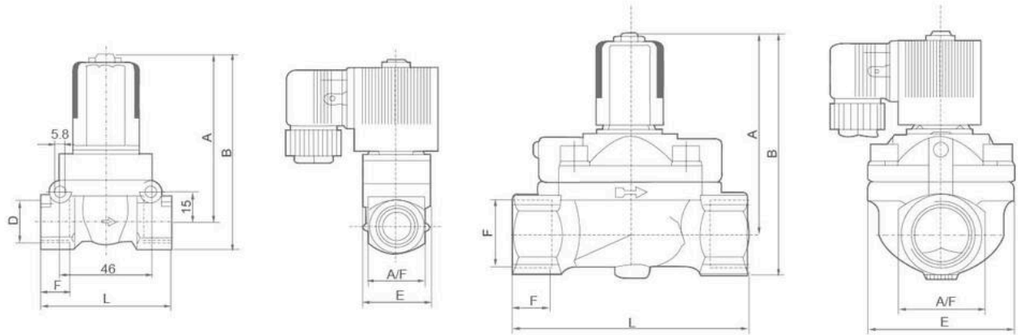

Dimension Sheet

Model	Bore(mm)	Port	A	B	F	E	L	A/F
XC5404-04	12.0	G1/2"	83.0	98	14	32	63	27
XC5404-06	20.0	G3/4"	99.5	125	16	60	92	40
XC5404-08	25.0	G1"	99.5	125	16	60	92	40

XC6213 Series Diaphragm Type Solenoid Valve



Ordering Code

XC	6213	04	—	AC220V	□
Factory Code	Model	Port Size		Standard Voltage	Wiring Form
		02:G1/4"		DC12V	Blank:Lead Wire Type
		03:G3/8"		DC24V	D:Joint Connector
		04:G1/2"		AC36V 50/60Hz	
		06:G3/4"		AC24V 50/60Hz	
		08:G1"		AC110V 50/60Hz	
				AC220V 50/60Hz	
				AC380V 50/60Hz	

Graphic Symbol

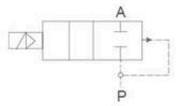

Specifcation

Model		XC6213-02	XC6213-03	XC6213-04	XC6213-04	XC6213-06	XC6213-06	XC6213-08
Inside Nominal Diameter(mm)			10		14		25	
Port Size		G1/4"	G3/8"	G1/2"	G1/2"	G3/4"	G3/4"	G1"
Working Pressure(MPa)					0.03~1.0			
Environment Temperature(℃)					-10~+55			
Medium Temperature(℃)					-10~+90			
Kv Value(m^3/h)		2		3.6	8.3	8.3	11	11
Power Consumptin	AC(VA)				14			
	DC(W)				8			
Change Frequency(Hz)				≥1			≥0.5	
Power/Voltage					AC: 50Hz 24V,36V,110V,220V, DC:24V,12V			

Overall Dimensions

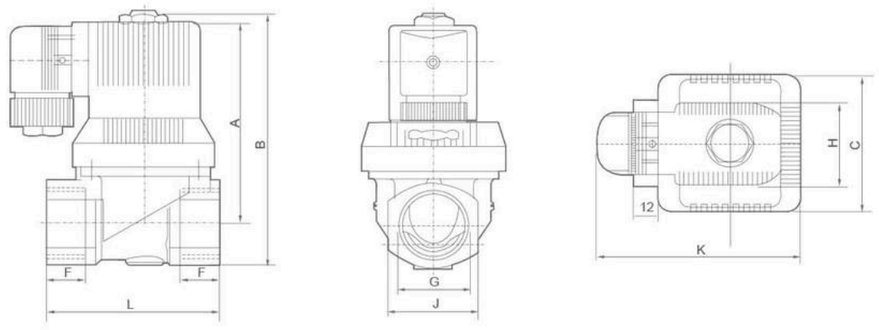

Dimension Sheet

Model	G	C	F	L	J	A	B	H	K
XC6213-02	G1/4"	38	14	50	26	71	85	35	71
XC6213-03	G3/8"	38	14	50	26	71	85	35	71
XC6213-04	G1/2"	38	14	50	26	71	85	35	71
XC6213-04	G1/2"	45	16	58	31	82	96	35	80
XC6213-06	G3/4"	45	16	58	31	82	96	35	80
XC6213-06	G3/4"	65	18	80.5	41	96	117	35	90
XC6213-08	G1"	65	18	80.5	41	96	117	35	90

2Q Series Air Control Two-Way Valve



Ordering Code

2Q	200	—	25
Specification Code	Aperture of Flow Rate		Port Size
2Q:Two-position two-way Air Control valve	160:16mm		15:G1/2"
	200:22mm		20:G3/4"
	250:25mm		25:G1"
	400:40mm		40:G1^1/2"
	500:50mm		50:G2"

Graphic Symbol

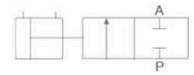

Specifcation

Model	2Q160-15	2Q200-20	2Q250-25	2Q400-40	2Q500-50
Working Medium	Air, Water, Oil, Gas				
Motion Pattern	Direct Drive				
Aperture of Flow Rate(mm)	16	20	25	40	50
CV Value	4.8	12	7.6	29	48
Joint Pipe Bore	G1/2"	G3/4"	G1"	G1-^{1}/2"	G2"
Operation Fluid Viscosity	50 CST(Below)				
Working-pressure Range	0~0.7Mpa				
Max. Pressure Resistance	1.05Mpa				
Control Pressure Range	0.3~0.6Mpa				
Operating Temperature Range	-5~100℃				
Material of Body	Brass				
Material of Oil Seal	PTFE				
Control Joint Pipe Bore	2-M5	2-G1/8"	2-G1/8"	2-G1/4"	2-G1/4"

Overall Dimensions

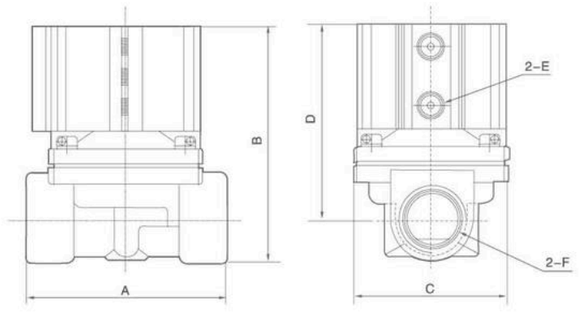

Dimension Sheet

Model	A	B	C	D	E	F
2Q160-15	67	89	57	75	M5	G1/2"
2Q200-20	99	116	57	95	G1/8"	G3/4"
2Q250-25	99	116	57	95	G1/8"	G1"
2Q350-35	127	123	93	97	G1/4"	G1-^{1}/4"
2Q400-40	123	146	95	116	G1/4"	G1-^{1}/2"
2Q500-50	170	155	118	114	G1/4"	G2"

SLP Series 2/2 Solenoid Valve(Normal Close)







Graphic Symbol

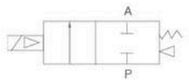

Ordering Code

SLP	06	□	—	E2	3L	S1	H
SLP Series	Port Size 06: G1/8" 08: G1/4" 10: G3/8" 15: G1/2" 20: G3/4" 25: G1" 35: G1-1/4" 40: G1-1/2" 50: G2" F: Flange	Seal Material Blank: NBR V: VITON E: EPDM		Voltage E1: AC110V E2: AC220V E3: AC380V E4: DC24V E5: DC12V E6: AC36V E7: AC24V E8: DC110V E9: DC48V E10: DC36V	Orifice(mm) 1L: 1.0 1.5L: 1.5 2.5L: 2.5 3L: 3.0 4L: 4.0 5L: 5.0 6L: 6.0 10L: 10.0 10.5L: 10.5 13L: 13.0 20L: 20.0 25L: 25.0 35L: 35.0 40L: 40.0 50L: 50.0 Cancel if same with port size	Body material Blank: Brass S1: SS316	Control style Blank: Normal close H: Normal open

- SLP series,2 port,2 position, 1/8" port size, NBR Seal, AC110V, Orifice: 3mm, Brass valve body, normal close, model: SLP06E1-3L
- SLP series,2 port,2 position, 3/8" port size, VITON Seal, AC220V, Orifice: 13mm, SS316 valve body, normal open,model: SLP10VE2-13LS1H

Product Features

- Normal Close,available body: brass,SS316.
- Multiple seals are available for different medium.
- Wide size range from 1/8" to 2" with both thread and flange connection.
- Diaphragm pilot solenoid valve, with lower working pressure.

Overall Dimensions

Φ3mm, Φ4mm, G1/8",G1/4",G3/8"

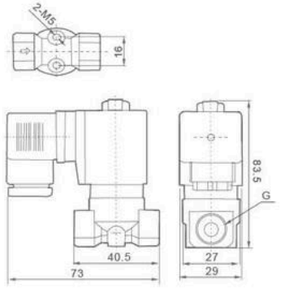

Φ10.5mm, G1/4",G3/8",G1/2"

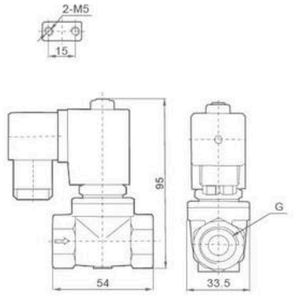

big orifice

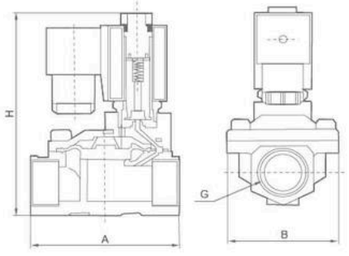

SLP Series 2/2 Solenoid Valve(Normal Close)

Specifcation

Port size (G)	Orifice (mm)	CV value	Pressure difference(Bar)				Max. temperature (℃)	Power		Model 220VAC 50/60Hz		Overall dimension
			Min. pressure	Max.working pressure				VA	W			
				Air、Gas	Water、Hot water、Liquid	Light oil ≤20CST		AC 220	DC 24V	Brass	Stainless steel	Length ×Width × Height A × B ×H(mm)
1/8"	3	0.23	0	13	13	10	80	22	13	SLP06E2-3L	SLP06E2-3LS1	
	3	0.23	0	13	13	-	130	22	13	SLP06EE2-3L	SLP06EE2-3LS1	
	3	0.23	0	13	13	10	120	22	13	SLP06VE2-3L	SLP06VE2-3LS1	
1/4"	3	0.23	0	13	13	10	80	22	13	SLP08E2-3L	SLP08E2-3LS1	
	3	0.23	0	13	13	-	130	22	13	SLP08EE2-3L	SLP08EE2-3LS1	
	3	0.23	0	13	13	10	120	22	13	SLP08VE2-3L	SLP08VE2-3LS1	
	10.5	1.47	0	10	10	10	80	22	13	SLP08E2-10.5L	-	
	10.5	1.47	0	10	10	-	130	22	13	SLP08EE2-10.5L	-	
	10.5	1.47	0	10	10	10	120	22	13	SLP08VE2-10.5L	-	
3/8"	3	0.3	0	13	13	10	80	22	13	SLP10E2-3L	SLP10E2-3LS1	
	3	0.3	0	13	13	10	130	22	13	SLP10EE2-3L	SLP10EE2-3LS1	
	3	0.3	0	13	13	10	120	22	13	SLP10VE2-3L	SLP10VE2-3LS1	
	4	0.6	0	8	8	6	80	22	13	SLP10E2-4L	SLP10E2-4LS1	
	4	0.6	0	8	8	6	130	22	13	SLP10EE2-4L	SLP10EE2-4LS1	
	4	0.6	0	8	8	6	120	22	13	SLP10VE2-4L	SLP10VE2-4LS1	
	10.5	1.68	0	10	10	10	80	22	13	SLP10E2-10.5L	-	
	10.5	1.68	0	10	10	-	130	22	13	SLP10EE2-10.5L	-	
	10.5	1.68	0	10	10	10	120	22	13	SLP10VE2-10.5L	-	
	13	4.5	0.5	16	16	13	80	22	13	SLP10E2-13L	SLP10E2-13LS1	
	13	4.5	0.5	16	16		130	22	13	SLP10EE2-13L	SLP10EE2-13LS1	
	13	4.5	0.5	16	16	13	120	22	13	SLP10VE2-13L	SLP10VE2-13LS1	
1/2"	10.5	1.75	0	10	10	10	80	22	13	SLP15E2-10.5L	-	66×48×112
	10.5	1.75	0	10	10	-	130	22	13	SLP15EE2-10.5L	-	66×48×112
	10.5	1.75	0	10	10	10	120	22	13	SLP15VE2-10.5L	-	66×48×112
	13	4.5	0.5	16	16	13	80	22	13	SLP15E2-13L	SLP15E2-13LS1	66×48×112
	13	4.5	0.5	16	16		130	22	13	SLP15E2-13L	SLP15E2-13LS1	66×48×112
	13	4.5	0.5	16	16	13	120	22	13	SLP15E2-13L	SLP15E2-13LS1	66×48×112
3/4"	20	7.6	0.5	16	16	13	80	22	13	SLP-20E2	SLP-20E2S1	75×58×118
	20	7.6	0.5	16	16		130	22	13	SLP-20EE2	SLP-20EE2S1	75×58×118
	20	7.6	0.5	16	16	13	120	22	13	SLP-20VE2	SLP-20VE2S1	75×58×118
1"	25	12	0.5	16	16	13	80	22	13	SLP-25E2	SLP-25E2S1	96×70×131
	25	12	0.5	16	16		130	22	13	SLP-25EE2	SLP-25EE2S1	96×70×131
	25	12	0.5	16	16	13	120	22	13	SLP-25VE2	SLP-25VE2S1	96×70×131
1-1/4"	35	22	0.5	16	16	13	80	22	13	SLP-35E2	SLP-35E2S1	131×96×146
	35	22	0.5	16	16		130	22	13	SLP-35EE2	SLP-35EE2S1	131×96×146
	35	22	0.5	16	16	13	120	22	13	SLP-35VE2	SLP-35VE2S1	131×96×146
1-1/2"	40	30	0.5	16	16	13	80	22	13	SLP-40E2	SLP-40E2S1	131×96×146
	40	30	0.5	16	16		130	22	13	SLP-40EE2	SLP-40EE2S1	131×96×146
	40	30	0.5	16	16	13	120	22	13	SLP-40VE2	SLP-40VE2S1	131×96×146
2"	50	48	0.5	16	16	13	80	22	13	SLP-50E2	SLP-50E2	165×120×167
	50	48	0.5	16	16		130	22	13	SLP-50EE2	SLP-50EE2	165×120×167
	50	48	0.5	16	16	13	120	22	13	SLP-50VE2	SLP-50VE2	165×120×167
Flange conn-ection	25	12	0.5	16	16	13	80	80	13	-	SLPFE2-25LS1	134×110×160
	25	12	0.5	16	16		130	130	13	-	SLPFEE2-25LS1	134×110×160
	25	12	0.5	16	16	13	120	120	13	-	SLPPFVE-25VLS1	134×110×160
Flange conn-ection	35	22	0.5	16	16	13	80	22	13	-	SLPFE2-35LS1	160×135×175
	35	22	0.5	16	16		130	22	13	-	SLPFEE2-35LS1	160×135×175
	35	22	0.5	16	16	13	120	22	13	-	SLPFVE2-35LS1	160×135×175
Flange conn-ection	40	30	0.5	16	16	13	80	22	13	-	SLPFE2-40LS1	160×145×180
	40	30	0.5	16	16		130	22	13	-	SLPFEE2-40LS1	160×145×180
	40	30	0.5	16	16	13	120	22	13	-	SLPFVE2-40LS1	160×145×180
Flange conn-ection	50	48	0.5	16	16	13	80	22	22	-	SLPFE2-50LS1	200×160×207
	50	48	0.5	16	16		130	22	22	-	SLPFEE2-50LS1	200×160×207
	50	48	0.5	16	16	13	120	22	22	-	SLPFEE2-50LS1	200×160×207

SLP Series 2/2 Solenoid Valve(Normal Open)





Graphic Symbol

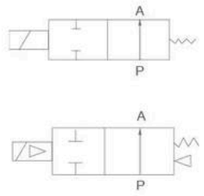

Product Features

- Normal open,available body: brass,SS316
- Multiple seals are available for different medium
- Wide size range from 1/8" to 2", with both thread and flange connection
- Diaphragm pilot solenoid valve, with lower working pressure

Overall Dimensions

Φ1-Φ2.5mm, G1/8",G1/4"

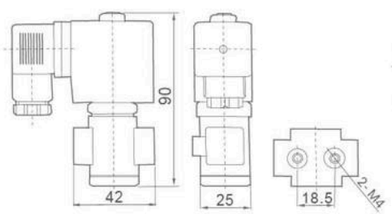

Φ3-Φ3mm, G1/8",G1/4"

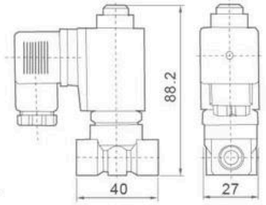

big orifice

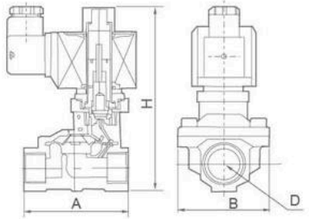

Specifcation

Port size (G)	Orifice (mm)	CV value	Pressure difference(Bar)				Max. temperature (℃)	Power		Model 220VAC 50/60Hz	
			Min. pressure	Max.working pressure				VA	W		
				Air、Gas	Water、Hot water、Liquid	Light oil ≤20CST		AC 220	DC 24V	Brass	Stainless steel
1/8"	1	0.04	0	30	30	25	80	22	13	SLP06E2-1LH	SLP06E2-1LS1H
	1	0.04	0	30	30	-	130	22	13	SLP06EE2-1LH	SLP06EE2-1LS1H
	1	0.04	0	30	30	25	120	22	13	SLP06VE2-1LH	SLP06VE2-1LS1H
	1.5	0.09	0	20	20	15	80	22	13	SLP06E2-1.5LH	SLP06E2-1.5LS1H
	1.5	0.09	0	20	20	-	130	22	13	SLP06EE2-1.5LH	SLP06EE2-1.5LS1H
	1.5	0.09	0	20	20	15	120	22	13	SLP06VE2-1.5LH	SLP06VE2-1.5LS1H
	2.5	0.2	0	15	15	12	80	22	13	SLP06E2-2.5LH	SLP06E2-2.5LS1H
	2.5	0.2	0	15	15	-	130	22	13	SLP06EE2-2.5LH	SLP06EE2-2.5LS1H
	2.5	0.2	0	15	15	12	120	22	13	SLP06VE2-2.5LH	SLP06VE2-2.5LS1H
	3	0.25	0	12	12	10	80	22	13	SLP06E2-3LH	SLP06E2-3LS1H
	3	0.25	0	12	12	-	130	22	13	SLP06EE2-3LH	SLP06EE2-3LS1H
	3	0.25	0	12	12	10	120	22	13	SLP06VE2-3LH	SLP06VE2-3LS1H

SLP Series 2/2 Solenoid Valve(Normal Open)

Specifcation

Port size (G)	Orifice (mm)	CV value	Pressure difference(Bar)				Max. temperature (℃)	Power		Model 220VAC 50/60Hz		Overall dimension
			Min. pressure	Max.working pressure				VA	W			
				Air、Gas	Water、Hot water、Liquid	Light oil ≤20CST		AC 220	DC 24V	Brass	Stainless steel	Length ×Width × Height A × B ×H(mm)
1/4"	1	0.04	0	30	30	25	80	22	13	SLP08E2-1LH	SLP08E2-1LS1H	
	1	0.04	0	30	30	-	130	22	13	SLP08EE2-1LH	SLP08EE2-1LS1H	
	1	0.04	0	30	30	25	120	22	13	SLP08VE2-1LH	SLP08VE2-1LS1H	
	1.5	0.09	0	20	20	15	80	22	13	SLP08E2-1.5LH	SLP08E2-1.5LS1H	
	1.5	0.09	0	20	20	-	130	22	13	SLP08EE2-1.5LH	SLP08EE2-1.5LS1H	
	1.5	0.09	0	20	20	15	120	22	13	SLP08VE2-1.5LH	SLP08VE2-1.5LS1H	
	2.5	0.2	0	15	15	12	80	22	13	SLP08E2-2.5LH	SLP08E2-2.5LS1H	
	2.5	0.2	0	15	15	-	130	22	13	SLP08EE2-2.5LH	SLP08EE2-2.5LS1H	
	2.5	0.2	0	15	15	12	120	22	13	SLP08VE2-2.5LH	SLP08VE2-2.5LS1H	
	3	0.25	0	12	12	10	80	22	13	SLP08E2-3LH	SLP08E2-3LS1H	
	3	0.25	0	12	12	-	130	22	13	SLP08EE2-3LH	SLP08EE2-3LS1H	
	3	0.25	0	12	12	10	120	22	13	SLP08VE2-3LH	SLP08VE2-3LS1H	
3/8"	13	4.5	0.5	8	8	7	80	33	32	SLP10E2-13LH	SLP10E2-13LS1H	66×48×124
	13	4.5	0.5	8	8		120	33	32	SLP10EE2-13LH	SLP10EE2-13LS1H	66×48×124
	13	4.5	0.5	8	8	7	120	33	32	SLP10VE2-13LH	SLP10VE2-13LS1H	66×48×124
1/2"	13	4.5	0.5	8	8	7	80	33	32	SLP15E2-13LH	SLP15E2-13LS1H	66×48×124
	13	4.5	0.5	8	8		120	33	32	SLP15EE2-13LH	SLP15EE2-13LS1H	66×48×124
	13	4.5	0.5	8	8	7	120	33	32	SLP15VE2-13LH	SLP15VE2-13LS1H	66×48×124
3/4"	20	7.6	0.5	8	8	7	80	33	32	SLP-20E2H	SLP-20E2S1H	75×58×130
	20	7.6	0.5	8	8		120	33	32	SLP-20EE2H	SLP-20EE2S1H	75×58×130
	20	7.6	0.5	8	8	7	120	33	32	SLP-20VE2H	SLP-20VE2S1H	75×58×130
1"	25	12	0.5	8	8	7	80	33	32	SLP-25E2H	SLP-25E2S1H	96×70×143
	25	12	0.5	8	8		120	33	32	SLP-25EE2H	SLP-25EE2S1H	96×70×143
	25	12	0.5	8	8	7	120	33	32	SLP-25VE2H	SLP-25VE2S1H	96×70×143
1-1/4"	35	22	0.5	8	8	7	80	33	32	SLP-35E2H	SLP-35E2S1H	131×96×158
	35	22	0.5	8	8		120	33	32	SLP-35EE2H	SLP-35EE2S1H	131×96×158
	35	22	0.5	8	8	7	120	33	32	SLP-35VE2H	SLP-35VE2S1H	131×96×158
1-1/2"	40	30	0.5	8	8	7	80	33	32	SLP-40E2H	SLP-40E2S1H	131×96×158
	40	30	0.5	8	8		120	33	32	SLP-40EE2H	SLP-40EE2S1H	131×96×158
	40	30	0.5	8	8	7	120	33	32	SLP-40VE2H	SLP-40VE2S1H	131×96×158
2"	50	48	0.5	8	8	7	80	33	32	SLP-50E2H	SLP-50E2S1H	165×120×179
	50	48	0.5	8	8		120	33	32	SLP-50EE2H	SLP-50EE2S1H	165×120×179
	50	48	0.5	8	8	7	120	33	32	SLP-50VE2H	SLP-50VE2S1H	165×120×179
Flange conn-ection	25	12	0.5	8	8	7	80	33	32		SLPFE2-25LS1H	134×110×172
	25	12	0.5	8	8		120	33	32		SLPFEE2-25LS1H	134×110×172
	25	12	0.5	8	8	7	120	33	32		SLPFVE2-25LS1H	134×110×172
Flange conn-ection	35	22	0.5	8	8	7	80	33	32		SLPFE2-35LS1H	160×135×187
	35	22	0.5	8	8		120	33	32		SLPFEE2-35LS1H	160×135×187
	35	22	0.5	8	8	7	120	33	32		SLPFVE2-35LS1H	160×135×187
Flange conn-ection	40	30	0.5	8	8	7	80	33	32		SLPFE2-40LS1H	160×145×192
	40	30	0.5	8	8		120	33	32		SLPFEE2-40LS1H	160×145×192
	40	30	0.5	8	8	7	120	33	32		SLPFVE2-40LS1H	160×145×192
Flange conn-ection	50	48	0.5	8	8	7	80	33	32		SLPFE2-50LS1H	200×160×219
	50	48	0.5	8	8		120	33	32		SLPFEE2-50LS1H	200×160×219
	50	48	0.5	8	8	7	120	33	32		SLPFVE2-50LS1H	200×160×219

THP Series 2/2 Solenoid Valve(Normal Close)





Graphic Symbol

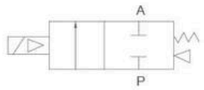

Ordering Code

THP	06		E2	□	—	2.5L		S2	□	□
THP Series	Port Size		Voltage	Seal Material		Orifice(mm)		Body material	Control style	Coil type
	06: G1/8"	08: G1/4"	E1: AC110V	T: Teflon		2.5L: 2.5		Blank: Brass	Blank: Normal close	Blank: DIN connctor
	10: G3/8"	15: G1/2"	E2: AC220V	V: VITON(N,V,E orifice≤Φ5.5mm opitional)		4.5L: 4.5		S1: SS316	H: Normal open	F: Flying leads
	20: G3/4"	25: G1"	E3: AC380V			15L: 15.0	Cancel if same with port size	S2: SS304		
	35: G1-1/4"		E4: DC24V			20L: 20.0				
	40: G1-1/2"		E5: DC12V			25L: 25.0				
	50: G2"		E6: AC36V			35L: 35.0				
	25F: 1" Flange		E7: AC24V			40L: 40.0				
	35F: 1-1/4" Flange		E8: DC110V			50L: 50.0				
	40F: 1-1/2" Flange		E9: DC48V							
	50F: 2" Flange		E10: DC36V							

- THP series,2 port,2 position, 1/8" port size, AC110V, NBR Seal, Orifice: 2.5mm, Brass valve body, normal close, DINcoil,model:THP06E1-2.5L
- THP series,2 port,2 position, 3/8" port size, AC220V, teflon Seal, Orifice: 15mm, SS304 valve body, normal open,flying leads coil, model: THP10TE2-15LS2HF

Product Features

- Normal Close,available body: brass,SS304, SS316
- Multiple seals are available for different medium
- Wide size range from 1/8" to 2"
- DIN style / flying leads coil, thread / flange connection
- Piston pilot solenoid valve with high working pressure and temperature

Overall Dimensions

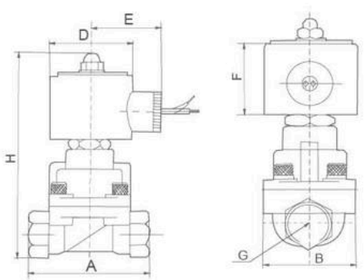

Flow Chart

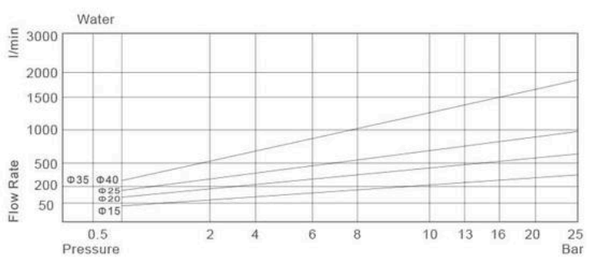

THP Series 2/2 Solenoid Valve(Normal Close)

Specifcation

Port size (G)	Orifice (mm)	CV value	Pressure difference(Bar)									Max. temperature (℃)	Power		Model 220VAC 50/60Hz		Overall dimension
			Min. pressure	Max.working pressure									VA	W	Brass	Stainless steel	Length ×Width × Height A × B ×H(mm)
				Air、Gas		Water、Hot water、Liquid		Light oil ≤20CST		Steam			AC 220	DC 24V			
				AC	DC	AC	DC	AC	DC	AC/DC							
G1/8"	2.5	0.23	0	8	8	8	8	6	6	10	180		22	13	THP06T-2.5L	-	48×25×85.5
	2.5	0.23	0	13	13	13	13	7	7	10	110		22	13	THP06V-2.5L	-	48×25×85.5
	4.5	0.6	0	7	4	7	4	4	4	7	165		22	13	THP06T-4.5L	-	58×25×85.5
	4.5	0.6	0	7	4	7	4	4	4	7	110		22	13	THP06V-4.5L	-	58×25×85.5
G1/4"	2.5	0.23	0	7	4	7	4	4	4	10	180		22	13	THP08T2-2.5L	-	48×25×85.5
	2.5	0.23	0	13	13	13	4	7	7	10	110		22	13	THP08V-2.5L	-	48×25×85.5
	4.5	0.6	0	7	4	7	4	4	4	7	165		22	13	THP08T-4.5L	-	58×25×85.5
	4.5	0.6	0	7	4	7	4	4	4	7	110		22	13	THP08V-4.5L	-	58×25×85.5
G3/8"	15	4.5	0.5	25	20	25	20	20	20		110		33	32	THP10T-15L	THP10T-15LS2	75×52×129
	15	4.5	0.5	25	20	25	20	20	20	10	185		30	25	THP10T-15LF	THP10T-15LS2F	75×52×129
G1/2"	15	4.5	0.5	25	20	25	20	20	20		110		33	32	THP-15T	THP-15TS2	75×52×129
	15	4.5	0.5	25	20	25	20	20	20	10	185		30	25	THP-15TF	THP-15TS2F	75×52×129
G3/4"	20	9.0	0.5	25	20	25	20	20	20		110		33	32	THP-20T	THP-20TS2	85×60×141
	20	9.0	0.5	25	20	25	20	20	20	10	185		30	25	THP-20TF	THP-20TS2F	85×60×141
G1"	25	13	0.5	25	20	25	20	20	20		110		33	32	THP-25T	THP-25TS2	100×70×148
	25	13	0.5	25	20	25	20	20	20	10	185		30	25	THP-25TF	THP-25TS2F	100×70×148
G1-1/4"	35	26	0.5	25	20	25	20	20	20	10	110		33	32	THP-35T	THP-35TS2	120×90×168
	35	26	0.5	25	20	25	20	20	20		185		30	25	THP-35TF	THP-35TS2F	120×90×168
G1-1/2"	35	26	0.5	25	20	25	20	20	20	10	110		33	32	THP40T-35L	THP40T-35LS2	120×90×168
	35	26	0.5	25	20	25	20	20	20		185		30	25	THP40T-35LF	THP40T-35LS2F	120×90×168
G2"	50	48	0.5	25	20	25	20	20	20		110		33	32	-	THP-50TS2	150×110×190
	50	48	0.5	25	20	25	20	20	20	10	185		30	25	-	THP-50TS2F	150×110×190
G1" Flange	25	13	0.5	25	20	25	20	20	20		110		33	32	-	THPPFT-25LS2	134×110×185
	25	13	0.5	25	20	25	20	20	20	10	185		30	25	-	THPFT-25LS2F	134×110×185
G1-1/4" Flange	35	26	0.5	25	20	25	20	20	20		110		33	32	-	THPFT-35LS2	160×135×200
	35	26	0.5	25	20	25	20	20	20	10	185		30	25	-	THPFT-35LS2F	160×135×200
G1-1/2" Flange	35	26	0.5	25	20	25	20	20	20		110		33	32	-	THPFT-40LS2	160×145×205
	35	26	0.5	25	20	25	20	20	20	10	185		30	25	-	THPFT-40LS2F	160×145×205
G2" Flange	50	45	0.5	25	20	25	20	20	20	10	110		33	32	-	THPFT-50LS2	200×155×250
	50	45	0.5	25	20	25	20	20	20		185		30	25	-	THPFT-50LS2F	200×155×250

THP Series 2/2 Solenoid Valve(Normal Open)





Graphic Symbol

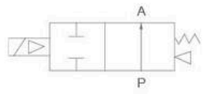

Product Features

- Normal open,available body: brass,SS304, SS316
- Multiple seals are available for different medium
- Wide size range from 1/8" to 2"
- DIN style / flying leads coil, thread / flange connection
- Piston pilot solenoid valve with high working pressure and temperature

Overall Dimensions

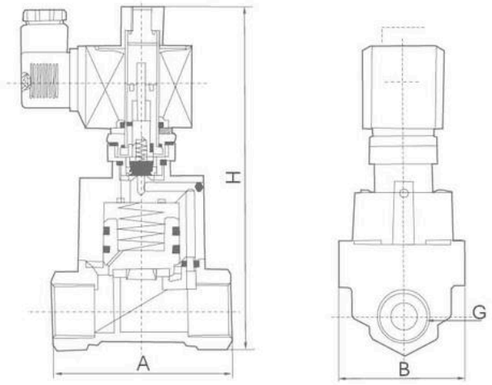

Specifcation

Port size (G)	Orifice (mm)	CV value	Pressure difference(Bar)					Max. temperature (℃)	Power		Model 220VAC 50/60Hz		Overall dimension
			Min. pressure	Max.working pressure					VA	W			
				Air、Gas	Water、Hot water、Liquid	Light oil ≤20CST	Steam		AC 220	DC 24V	Brass	Stainless steel	Length ×Width × Height A × B ×H(mm)
3/8"	15	4.5	0.5	8	8	8	8	130	33	32	THP10T-15LH	THP10T-15LS2H	75×52×147
	15	4.5	0.5	8	8	8	8	130	33	32	THP10T-15LHF	THP10T-15LS2HF	75×52×147
1/2"	15	4.5	0.5	8	8	8	8	130	33	32	THP-15TH	THP-15TS2H	75×52×147
	15	4.5	0.5	8	8	8	8	130	33	32	THP-15THF	THP-15TS2HF	75×52×147
3/4"	20	9	0.5	8	8	8	8	130	33	32	THP-20TH	THP-20TS2H	85×60×159
	20	9	0.5	8	8	8	8	130	33	32	THP-20T2HF	THP-20TS2HF	85×60×159
1"	25	13	0.5	8	8	8	8	130	33	32	THP-25TH	THP-25TS2H	100×70×166
	25	13	0.5	8	8	8	8	130	33	32	THP-25THF	THP-25TS2HF	100×70×166
1-1/4"	35	26	0.5	6	6	6	6	130	33	32	THP-35TH	THP-35TS2H	120×90×186
	35	26	0.5	6	6	6	6	130	33	32	THP-35THF	THP-35TS2HF	120×90×186
1-1/2"	35	26	0.5	6	6	6	6	130	33	32	THP40T-35LH	THP40T-35LS2H	120×90×186
	35	26	0.5	6	6	6	6	130	33	32	THP40T-35LHF	THP40T-35LS2HF	120×90×186
1" Flange	25	25	0.5	8	8	8	8	130	33	32	-	THP-25FE2TS2H	134×110×200
	25	13	0.5	8	8	8	8	130	33	32	-	THP-25FE2TS2HF	134×110×200
1-1/4" Flange	35	26	0.5	6	6	6	6	130	33	32	-	THP-35FE2TS2H	160×134×215
	35	26	0.5	6	6	6	6	130	33	32	-	THP-35FE2TS2HF	160×134×215
1-1/2" Flange	40	26	0.5	6	6	6	6	130	33	32	-	THP-40FE2TS2H	160×145×200
	40	26	0.6	6	6	6	6	130	33	32	-	THP-40FE2TS2HF	160×145×200

XPT Series Electronic-drain Valve



XPT-08



XPT-A-15



XPT-B-15



XPT-A-15-S

Product Features

The electronic-drain valve is made of solid state electronic time-setting and solenoid valve,which can make the compress condensates water drain automatically.It is widely used in filter drier,oil/water segerator,refrigerant compressed air drying machine,drying machine,air compressor drip-feet,and son on.The time of drain and interval can be adjustable according to different needs.

Specifcation

Model	XPT,XPT-A,XPT-B
Various pressure can be provided	1.6MPa、4.0MPa、8.0MPa
Various electric voltages can be provided	AC220V、AC110V、DC24V
Variety connects can be provided	G1/2" female thread
Interval	(OFF)0.5~45 Minutes
Drain time	(ON) 0.5~10 Second
Manual test button	TEST
Protection grade	IP65
Insulate grade	H class(Max/temp:180℃)

- It is can susbsitute for the expensive process valve;
- Only one type applies all applications;
- It is can be installed simply,full-automatically,without maintenane;
- Sieve of ball valve can be mached

XMFZ Series Right Angle Pulse Valve



Ordering Code

X	MF	Z	—	25	—	P	EX
XCPC Product	Pulse Valve	Type Code Z:Solenoid Control ZQ:Pneumatic Control		Orifice Size		Thead Type Blank:Normal Thread Type A:Thread Type+ Insert pipe P:Thread Type S:Double Diaphragms J:Thread Type (Economy Type)	Wiring Form Blank:Normal Type EX:Ex-proof Type

Speciality

Adopt international advanced technology.
Used for dust remover.
Key parts all made of imported materials.
Pneumatic control type,solenoid control type,ex-proof solenoid control type for choose.
Female thread connection port,easy to be mounted.

Specifcation

Model	XMF-Z -20A	XMF-Z -20P	XMF-Z -20	XMF-Z -25	XMF-Z -25P	XMF-Z -35P	XMF-Z -40S	XMF-Z -50S	XMF-Z -62S	XMF-Z -76S	XMF-Z -100S
Working Pressure	0.3~0.8MPa										
Ambient Temperature	-5~55℃										
Relatively Humidity	＜85%										
Working Medium	Clean Air										
Voltage	AC110V/AC220V/DC24V										
Diaphragm Life Cycles	Over 1000k Cycles										
Orifice(mm)	Φ20	Φ20	Φ20	Φ25	Φ25	Φ35	Φ40	Φ50	Φ62	Φ76	Φ100
Connection Port	G3/4"	G3/4"	G3/4"	G1"	G1"	G1 1/2"	G1 1/2"	G2"	G2 1/2"	G3"	Φ100

Overall Dimensions

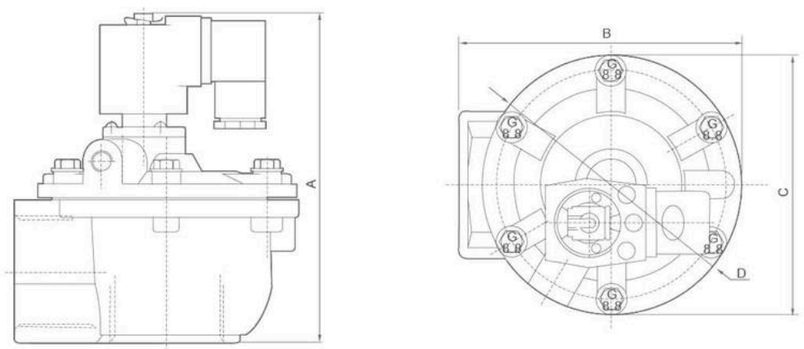

Dimension Sheet

Model	XMF-Z-20A	XMF-Z-20P	XMF-Z-20	XMF-Z-25	XMF-Z-25P	XMF-Z-35P	XMF-Z-40S	XMF-Z-50S	XMF-Z-62S	XMF-Z-76S	XMF-Z-100S
A	173	124	110	110	124	142	166	202	222	245	356.5
B	145	105	90.5	90.5	105	121	132	210	210	230.5	286.5
C	-	82.5	75	75	82.5	-	-	-	-	-	-
D	Φ90	-	-	-	-	Φ112	Φ137	Φ185	Φ185	Φ200	Φ221

XMFY Series In Line Pulse Valve



Ordering Code

X	MF	—	Y	—	50	—	S	EX
XCPC Product	Pulse Jet Valve		Type Code Y:Solenoid Control YQ:Pneumatic Control		Orifice		Double Diaphragms	Wiring Form Blank:Normal Type EX:Ex-proof Type

Speciality

Adopt international advanced technology
Used for dust remover
Key parts all made of imported materials
Pneumatic control type.solenoid control type.ex-proof solenoid control type for choose
Directing mounted to gas bag better blowing effect and small loss of air source.

Specifcation

Model	XMF-Y-50S	XMF-Y-62S	XMF-Y-76S
Working Pressure	0.3~0.8MPa		
Ambient Temperature	-5~55℃		
Relatively Humidity	＜85%		
Working Med ium	Clean Air		
Voltage	AC110V/AC220V/DC24V		
Diaphragm Life Cycles	Over One Million Cycles		
Orifice(mm)	Φ50	Φ62	Φ76
Connection Port	G2"	G2-1/2"	G3"

Overall Dimensions

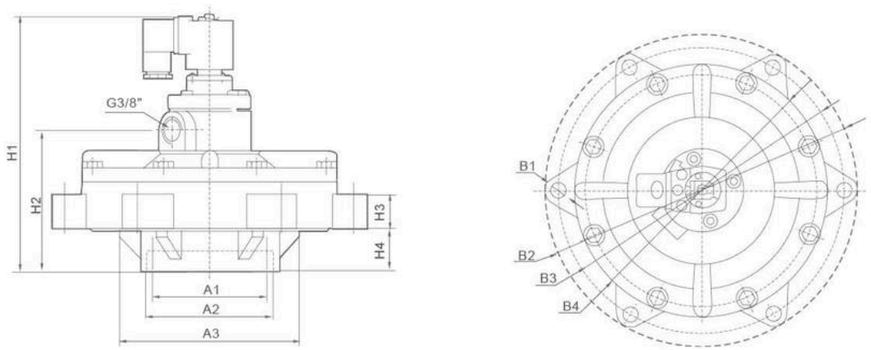

Dimension Sheet

Model	A1	A2	A3	B1	B2	B3	B4	H1	H2	H3	H4
XMF-Y-50S	Φ64.5	Φ78.5	Φ118	6-Φ11.5	Φ200	Φ180	Φ159	187	100	25	31
XMF-Y-62S	Φ80	Φ93.5	Φ145	6-Φ11	Φ226	Φ204	Φ185	197	107	34.5	35
XMF-Y-76S	Φ90	Φ99	Φ141	6-Φ11	Φ248	Φ227	Φ200	205	113	27	34

XMF Series Insert Pipe Type Pulse Valve



Ordering Code

X	MF	□	25	—	DD	EX
XCPC Product	Pulse Jet Valve	Type Code Blank:Solenoid control Q:Pneumatic control	Orifice Solenoid		Insert Pipe Type	Wiring Form Blank:Normal Type EX:Ex-proof Type

Speciality

Adopt international advanced technology
Used for dust remover
Key parts all made of imported materials
Pneumatic control type.solenoid control type,ex-proof solenoid control type for choose.
Insert pipe style,much easier to be mounted.

Specifcation

Model	XMF-25DD	XMF-45DD
Working Pressure	0.3~0.8MPa	
Ambient Temperature	-5~55℃	
Relatively Humidity	< 85%	
Working Med ium	Clean Air	
Voltage	AC110V/AC220V/DC24V	
Diaphragm Life Cycles	Over One Million Cycles	
Orifice(mm)	Φ25	Φ45
Connection Port	G1"	G1-1/2"

Overall Dimensions

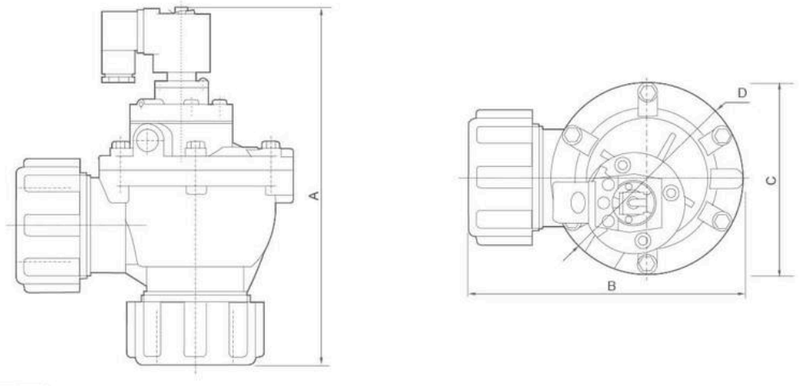

Dimension Sheet

Model	A	B	C	D
XMF-25DD	189	131	82.5	-
XMF-45DD	237	179.5	-	Φ126

XCP Series Plastic Actuator Bevel Valve



Ordering Code

XCP	15	—	50	S	C	□
Serise Code XCP Series Plastic Bevel Valve	Port Size 10:G3/8" 15:G1/2" 20:G3/4" 25:G1" 32:G1-1/4" 40:G1-1/2" 50:G2" 65:G2-1/2" 80:G3"		Actoator Size 40:40mm 50:50mm 63:63mm 80:80mm 100:100mm	Action Type S:Single Action D:Double Action	Control Function C:Normal Close (Standard) O:Normal Open	Body Material Blank:S.S 304 (Standard) 316:S.S 316 316L:S.S 316L

Graphic Symbol

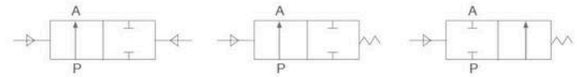

Double-Acting | Normally Closed | Normally Open

Specifcation

Model	10	15	20	25	32	40	50	65	80
Port size	G3/8"	G1/2"	G3/4"	G1"	G1-1/4"	G1-1/2"	G2"	G2-1/2"	G3"
KV Value(m^3/h)	3.7	4.2	9	19	33	42	59	90	135
Max.Working Pressure(Mpa)	0~1.6	0~1.6	0~1.1	0~1.1	0~1.5	0~1.25	0~1.0	0~1.6	0~1.6
Min.Pilot Pressure(Mpa)	0.39	0.39	0.39	0.42	0.5	0.44	0.4	0.4	0.4
Actuator	40	50	50	50/63	63	63	63/80	80	100
Medium Temperature	-10~+180℃								
Flow Direction	A(Flow Direction Below The Seat) or B(Flow Direction above The Seat)								

Overall Dimensions

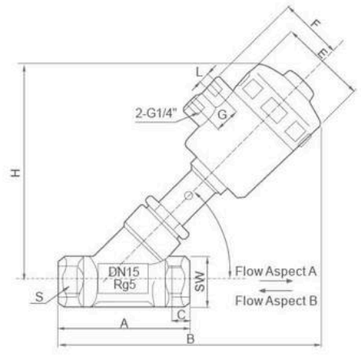

Dimension Sheet

Orifice Size(mm)	Port size	Actuator Size(Φmm)	A	B	C	ΦE	F	H	S	SW	G	L
10	G3/8"	40	65	142	12	53	30	85	G3/8"	25	20	G1/8"
15	G1/2"	50	76	168	14	64	44	115	G1/2"	28	24	G1/4"
20	G3/4"	50	92	175	16	64	44	131	G3/4"	32	24	G1/4"
25	G1"	63	103	218	21	80	54	166	G1"	39	24	G1/4"
32	G1-1/4"	63	112	228	19	80	54	172	G1-1/4"	49	24	G1/4"
40	G1-1/2"	63	129	232	21	80	54	174	G1-1/2"	56	24	G1/4"
50	G2"	80	143	263	27	100	62	202	G2"	68	24	G1/4"
65	G2-1/2"	80	186	280	28	100	62	209	G2-1/2"	84	24	G1/4"
80	G3"	100	218	355	34	125	71	268	G3"	101	30	G1/4"

XC Series Stainless Steel Bevel Valve



Ordering Code

XC	10	—	40	—	□	—	□

Serise Code
XC Series Stainless Steel Bevel Valve

Port Size
10:G3/8"
15:G1/2"
20:G3/4"
25:G1"
32:G1-1/4"
40:G1-1/2"
50:G2"
65:G2-1/2"
80:G3"

Actoator Size
40:40mm
50:50mm
63:63mm
90:90mm
100:100mm

Type
SC:Single Action Normal Close
SO:Single Action Normal Open
DC:Double Action Normal Close
DF:Double Action Free Installation

Body Material
Blank:S.S 304 (Standard)
316:S.S 316
316L:S.S 316L

Specifcation

Model	XC10-80SC/SO/DC/DF		
Port size	DN10-DN50		
Thread	G3/8"-G3"		
Welded	DIN11850	2 DIN11850	3 ISO2037
Valve Body	CF8M		
Actuator	CF8		
Seat seals	PTFE		
Stem seals	PTFE/FKM		
Piston seals	FKM/NBR		

Model	XC10-80SC/SO/DC/DF
Applicable medium	Water,liquid,neutral gas,water steam slight corrosive gas and liquid
Temperature range	PTFE:-10℃ to +180℃
Ambient temperature	-10℃ to +60℃
Viscosity	max. 600mm²/s
Installation	Any position
Controlling medium	Air or neutral gas
Controlling pressure range	0.3~1Mpa

Overall Dimensions

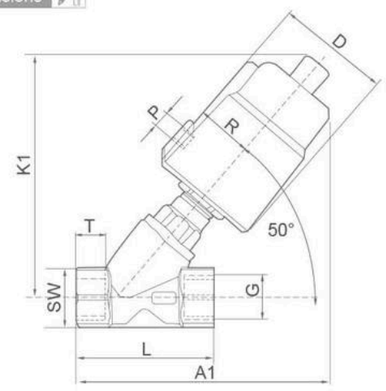

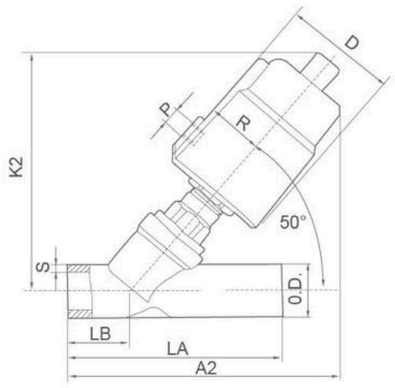

Dimension Sheet

Specification	Actuator (mm)	D	R	P	Thread						Welded					
					G	K1	A1	L	T	SW	O.D.	K2	A2	LA	LB	S
DN10	40	53	28	G1/8"	G3/8"	105	144	65	12	25	/	/	/	/	/	/
DN15	50	56	35	G1/8"	G1/2"	142	182	76	14	28	21	115	142	100	18	3
DN20	50	56	35	G1/8"	G3/4"	152	189	92	16	32	27	131	170	117	30	3
DN25	50	56	35	G1/8"	G1"	155	207	103	21	39	34	138	175	130	30	3
DN25	63	70	43	G1/8"	G1"	176	217	103	21	39	34	166	200	130	30	3
DN32	63	70	43	G1/8"	G1-1/4"	177	222	112	19	49	42	172	207	145	30	3
DN40	63	70	43	G1/8"	G1-1/2"	182	225	129	21	56	48	174	207	160	30	4
DN50	63	70	43	G1/8"	G2"	196	249	143	27	68	60	193	227	190	30	4
DN50	90	94	56	G1/4"	G2"	206	268	143	27	68	60	202	235	190	30	4
DN65	90	94	56	G1/4"	G2-1/2"	215	290	186	28	84	76	209	255	230	40	5
DN80	125	135	73	G1/4"	G3"	295	335	218	34	101	/	/	/	/	/	/

XQ22HD Series Right Angle Valve



Ordering Code

X	Q	22	HD	—	□	—	□	—	□

XCPC Product

Right angle valve code

Two-position Two-way

Air control liquid valve

Connection Size
15:G1/2" 20:G3/4"
25:G1" 32:G1¼"
40:G1½" 50:G2"

Type
S:Single acting type
D:Double acting type
K:Normally open

Material
Blank: Normal type
H: High temperature type

Product Features

Classical design, durable Air control design, energy saving and environmental protection Big flow rate, safety and Precision
Can work at low pressure, smartness for on and off, good seal performance. There are two kinds of structure single acting type and double acting type.
Application: food, medicine, industry, abstersion, landification, printing, etc.
Remark: Normally open: Flow comes under the piston seal, against arrow on body.

Internal structure

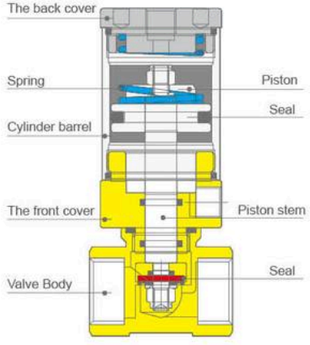

Specifcation

Model	Orifice	Medium	Working pressure	Temp range	Kv value(m3/k)
XQ22HD-15	15mm	Compress Air Water Oil	0.2~0.6MPa	-5-60℃ (High temperture) -5-150℃	4
XQ22HD-20	20mm				5
XQ22HD-25	25mm				10
XQ22HD-32	32mm				25
XQ22HD-40	40mm				25
XQ22HD-50	50mm				40

Overall Dimensions

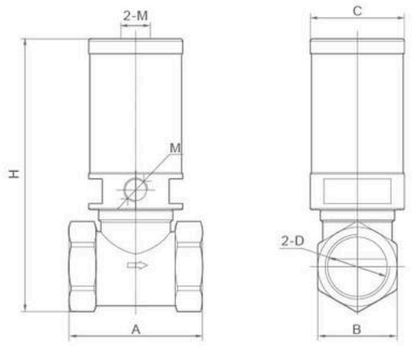

Dimension Sheet

Model	A	B	C	D	H	M
XQ22HD-15	47	26	31	G1/2"	96	G1/8"
XQ22HD-20	54	33	31	G3/4"	102	G1/8"
XQ22HD-25	66	34	38	G1"	115	G1/8"
XQ22HD-32	77	48	46	G1-1/4"	143	G1/8"
XQ22HD-40	86	54	56	G1-1/2"	160	G1/8"
XQ22HD-50	116	67	69	G2"	182	G1/8"

XGV 200 Series Process Valve



Ordering Code

XGV2	0	1	15	—	NC	M

XGV Series
XGV2 Series Process Valve

Control Method
0:Air Operated
1:External Pilot Solenoid

Valve Style
1:For Compressed Air and air-hydro Circuit Control
2:For Flow Control
3:Coolant Valve
4:Steam Valve

Nominal Diameter
06:G1/8"
08:G1/4"
10:G3/8"
15:G1/2"
20:G3/4"
25:G1"
32:G1-1/4"
40:G1-1/2"
50:G2"

Control Function
NO:Normal Open
NC:Normal Closed
CO:Liberty(double acting)

Seals Material
B:NBR
F:FKM
P:PTFE
M:METAL

Specifcation

Model	GV2*1---BFC seal material:NBR/FKM/EPR			GV2*2---BFC seal material:NBR/FKM/EPR			GV2*3---M seal material:Metal		GV2*4---P seal material:PTFE
	NBR	FKM	EPR	NBR	FKM	EPR			
Fluid	Air(standard dry); CO_2 (less than 0.7Mpa); N_2;Turbine oil Hydraulic fluid(40~100mm²/s)	Argon Helium Turbine oil, Hydraulic fluid (40~100mm²/s)	CO_2 (0.7MPa or more)	Water,oil,Air, Vacuum etc. (-5-60°C)	Water,oil,etc. Air Operated Only (-5-99°C)		Coolant (-5~60°C) (-5~99°C for air operated)		Steam (-5~180°C)
Body /Actuator Material	S.S304/Aluminum alloy								
Seal Material	NBR	FKM	EPR	NBR	FKM	EPR	NBR	FKM	
Temperature of Medium	-5~60°C	-5~99°C		-5~60°C	-5~99°C		-5~60°C	-5~99°C	-5~180°C
Ambient Temperature	-5~50°C(Air operated type 60°C)								-5~60°C
Proof Pressure	1.5MPa								
Operating Pressure	0~1.0MPa			NO.、CO.and NC.standard orifice dia :low vacuum to 0.5Mpa NC.samller orifice dia:low vacuum to 1.0Mpa			0~1.0MPa		0~0.9MPa
External pilot air — Pressure range	0.2~0.7MPa			NC.:0.25~0.7MPa NO./CO.:0.1+025 x Use Pressure~0.25+0.25 x Use Pressure Mpa			NC.:0.25~0.7MPa NO.:0.1+025 x Use Pressure~0.7Mpa		NC.:0.3~0.7MPa NO.:0.1+025x Use Pressure ~0.25+0.25xUse Pressure Mpa
External pilot air — Lubrication	Not required(use turbine oil Class 1 ISO VG32,f lubricated.)								
External pilot air — lemperature	-5 to 50'C(Air operated type:60°C)								-5 to 60°C

Overall Dimensions

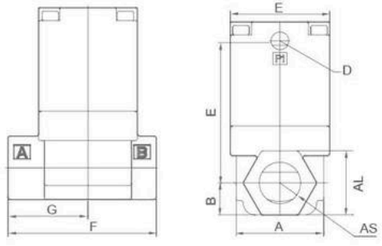

Dimension Sheet

Model	Port Size	A	B	C	D	E	F	G	AS	AL
DN 6	G1/8"	28	12.5	39.5	1/8	27	45	24	1/8	23
DN 8	G1/4"	28	12.5	39.5	1/8	27	45	24	1/4	23
DN 10	G3/8"	28	12.5	39.5	1/8	27	45	24	1/4	23
DN 10	G3/8"	37	14	55	1/8	42	63	34	3/8	27
DN 15	G1/2"	37	14	55	1/8	42	63	34	1/2	27
DN 20	G3/4"	46	17.5	60.5	1/8	50	80	43	3/4	33
DN 25	G1"	58	20	73	1/8	60	90	49	1	43
DN 32	G1-1/4"	68	26.5	94	1/8	77	105	52.5	1-1/4	48
DN 40	G1-1/2"	85	30	107	1/4	96	120	60	1-1/2	55
DN 50	G2"	100	37	123	1/4	113	140	70	2	66

PAV100 Series Pneumatic Axial Valve



Ordering Code

PAV	101	—	15	—	NC	—	E

Series Code
PAV Series

Model
101:101 Female Threaded(Standard)
102:102 Flare Connection
105:105 Tri-Clamp Ends

Nominal Diameter
10:G3/8"
15:G1/2"
20:G3/4"
25:G1"
32:G1-1/4"
40:G1-1/2"
50:G2"

Control Function
NO:Normally Open
NC1:Normally closed (single acting)
NC2:Normally closed (Double acting)
NA:Liberty

Seat Seals
E:EPDM(standard)
F:FKM

Specifcation

Model		PAV101~105:DN10~50
Temperature of Medium	NBR	-10~ 70°C
	FKM	-10~ 150°C
	EPDM	-10~130°C
Temperature of Pilot Valve		-10~60°C
Working pressure		0~1.6 MPa
Max.Control Pressure of pilot valve		1 MPa
Control Pressure Rang(double acting)		0.35~0.8 MPa
Control Pressure Rang(single acting)		0.45~0.8MPa
Ambient and fluid of Pilot valve		Filtered Air or gas
Material Od Bpdy		S.S.304/316
Seals of Proof of duty		FPM
Piston Seals		FKM/NBR

Overall Dimensions

PAV101

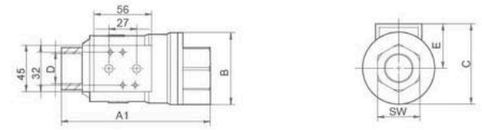

PAV102

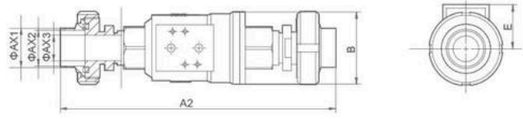

PAV105

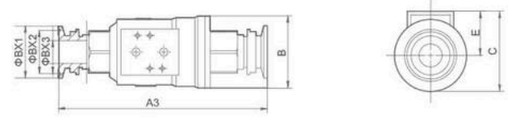

Dimension Sheet

DN	Port Size	A1	A2	A3	B	C	D	E	SW	AX1	AX2	AX3	BX1	BX2	BX3
DN 10	G3/8"	98	192	158	46	46	3/8	33	22	19	15.5	14	50.5	43.5	10
DN 15	G1/2"	112	206	172	52	52	1/2	35	27	25.5	22	14	50.5	43.5	13
DN 20	G3/4"	135	233	195	64	64	3/4	40	32	32	29	18	50.5	43.5	19
DN 25	G1"	143	245	203	69	69	1	43	41	38	35	22	50.5	43.5	25
DN 32	G1-1/4"	165	284	235	86	86	1-1/4	51	50	45	40	27	50.5	43.5	32
DN 40	G1-1/2"	180	300	250	96	96	1-1/2	58	56	51	47.5	33	64	56.5	38
DN 50	G2"	207	332	287	108	108	2	62	70	57	53	43	64	56.5	50

PAV200 Series Pneumatic Axial Valve





Ordering Code

PAV	201	—	15	—	NC	—	B	—	□
Series Code	**Model**		**Nominal Diameter**		**Control Function**		**Seat Seals**		**Style**
PAV Series	201:201 Female Threaded(Standard) 202:202 Flare Connection 205:205 Tri-Clamp Ends		08:G1/4" 10:G3/8" 15:G1/2" 20:G3/4" 25:G1" 32:G1-1/4" 40:G1-1/2" 50:G2"		NO:Nornally Open NC1:Normally closed (single acting) NC2:Normally closed (Double acting) NA:Liberty		Blank:PU(standard) F:FKM B:NBR		Blank:common style H:High Pressure Style

Specifcation

Model		PAV201~205:DN08~50
Temperature of Pilot Valve		-10~60°C
Max.Control Pressure of pilot Valve		1.0 MPa
Ambient and fluid of Pilot valve		Filtered Air or gas
Control Pressure Rang(double acting)		0.45~0.8MPa
Control Pressure Rang(single acting)		0.5~0.8MPa
Temperature of Medium		-20~80°C
Filtering accuracy of media		200mesh(0.074mm)
Material of Body		S.S.304/316
Common style working pressure		1.6MPa
High pressure styleMax. Working pressure	Liquid	12MPa
	Gas	8MPa
Applicable medium		Water, air oil and other non-corrosive liquids or gases

Overall Dimensions

DN08~10

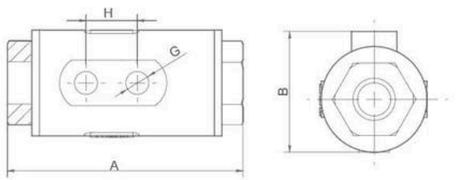

DN15~25

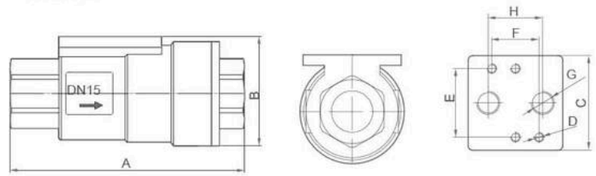

Dimension Sheet

DN	Port Size	Kv m^3/h	A	B	C	D	E	F	G	H
DN 8	G1/4"	1.9	78	38	/	/	/	/	G1/8	17
DN 10	G3/8"	2.5	77	40	/	/	/	/	G1/8	17
DN 15	G1/2	5.7	99	45	40	M4	29	20	G1/8	20
DN 20	G3/4"	8.8	110	57	49	M5	32	24	G1/8	24
DN 25	G1"	13.3	123	67	64	M5	32	24	G1/8	24

HLP Series Pressure Controller



Descriptions

For use with fluorinated refrigerants as well as with a air and water.
(Allowable Fluid Temp.: -10℃ ~+110℃)
Various contact functions available,
With SPDT contact mechanism,
Renovated micro-switch stucture ensures the reliable switch function,
Manual-controlled and no use of other instruments to have a function test,
Flexible mounting plate suits various kinds of application.
Our products can substitute for congeneric import products, such as JOHNSON、DANFOSS、SAGINOMIYA、3S、RANCO and so on

Specifcation

Model	Range(bar)		Differential(bar)		Factory Setting(bar)		Max. Bellows Press(bar)
	Min.	Max.	Min.	Max.	OFF	ON	
HLP503	-0.7	3	0.2	1.5	2	1	16.5
HLP506	-0.7	6	0.6	4	3	2	16.5
HLP506M	-0.7	6	Duplicate voltage disparity≤1		3	Manual Reset	16.5
HLP110	1	10	1	3	6	5	16.5
HLP516	5	16	1	4	10	8	35
HLP520	5	24	2	5	16	13	35
HLP530D	5	30	5	10	20	15	35
HLP530	8	30	Fixed3-5		20	15-17	35
HLP530M	8	30	Duplicate voltage disparity≤4		20	Manual Reset	35

Model	Press Side	Range(bar)		Differential(bar)		Factory Setting(bar)		Max. Bellows Press(bar)
		Min.	Max.	Min.	Max.	OFF	ON	
HLP830	Low Side	-0.7	6	0.6	4	3	2	16.5
	High Side	8	30	Fixed 3~5		2	15	35
HLP830HM	Low Side	-0.7	6	0.6	4	3	2	16.5
	High Side	8	30	Duplicate voltage disparity≤4		20	Manual Reset	35
HLP830HLM	Low Side	-0.7	6	Duplicate voltage disparity≤4		3	Manual Reset	16.5
	High Side	8	30	Duplicate voltage disparity≤4		20	Manual Reset	35

Way of Connection

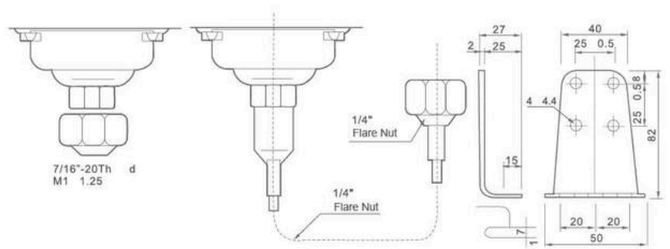

Slight Moring Swith's Date

Specified Voltage(V) / Specified Electric Current(A)	A.C. 125	A.C. 125
Non-Inductive Current	48	12
Maximum Load	48	12
Twinking Electric Current	228	72

XGT Series Pneumatic Gear Vibrator



XGT-8



XGT-16

Feature

Product Features

Vibration intensity can be adjusted based on air pressure,can immediately start,stop,fast,low-noise,vibration force,security.

Application

Feed material conveyor,vibrating screening,vibrating hopper,to help fill packging,foundry sand mold vibration.

Works

Copper eccentric gear installed counterweight impact ai intake charge into the gear thrust gear rotates,the eccentric rotation of the centrifugal weight with vibration,the gear driven by a bearing,low noise.

Specifcation

Model	Frequency(V.P.M)			Vibration power(N)			Air consumption(L/min)		
	0.2Mpa	0.4Mpa	0.6Mpa	0.2Mpa	0.4Mpa	0.6Mpa	0.2Mpa	0.4Mpa	0.6Mpa
XGT-8	34.850	42.000	45.500	980	2.100	2.800	46	80	112
XGT-10	27.500	35.000	37.500	840	1.390	2.400	46	80	112
XGT-13	26.000	30.000	33.000	1.400	2.440	3.730	120	200	290
XGT-16	17.000	21.500	24.000	1.220	2.090	3.160	120	200	290
XGT-20	17.000	20.000	23.000	2.170	4.040	5.520	185	325	455
XGT-25	12.000	15.500	17.000	2.120	3.510	5.070	185	325	455
XGT-32	13.000	14.000	16.000	3.380	5.430	7.540	330	530	745
XGT-36	7.800	10.000	13.000	3.300	5.000	7.150	330	530	745
XGT-40	7.500	8.800	9.500	4.350	7.350	9.850	408	428	680
XGT-48	5.800	7.500	9.700	4.950	7.750	10.6007	408	428	680
XGT-60	4.758	6.530	8.515	5.700	9.800	11.150	505	600	920

Overall Dimensions

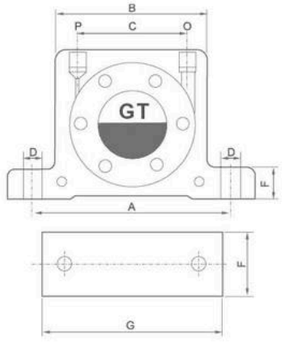

Dimension Sheet

Model	A	B	C	D	E	F	G	P/O
XGT-8	68	50	28	7	12	35	86	1/8
XGT-10	68	50	28	7	12	35	86	1/8
XGT-13	90	65	39	9	16	43	113	1/4
XGT-16	90	65	39	9	16	43	113	1/4
XGT-20	104	82	56	9	17	56	128	1/4
XGT-25	104	82	56	9	17	56	128	1/4
XGT-32	130	103	76	11	21	73	160	3/8
XGT-36	130	103	76	11	21	73	160	3/8
XGT-40	152	122	85	18	27	80	194	3/8
XGT-48	152	122	85	18	27	80	194	3/8
XGT-60	195	140	96	21	30	95	240	1/2

XK Series Pneumatic Ball Vibrator



XK-10



XK-16

Feature

Product Features

Vibration intensity according to the pressure regulator,affordable,long life,safe, an be used in damp,dust and explosion sites.

Application

Feed material conveyor,vibrating screening,vibrating hopper,to help fill packaging,foundry sand mold vibration.

Works

Means of precision steel sleeve and the ball,the outer shell sealed by a special aluminum alloy,to promote the use of air charged into the rotary sleeve in the steel ball weigh ball and the distance between the center of the centrifugal force generated vibration.

Specifcation

Model	Frequency(V.P.M)			Vibration power(N)			Air consumption(L/min)		
	0.2Mpa	0.4Mpa	0.6Mpa	0.2Mpa	0.4Mpa	0.6Mpa	0.2Mpa	0.4Mpa	0.6Mpa
XK-8	22.500	27.250	34.100	245	465	700	90	150	190
XK-10	22.500	27.250	34.100	245	465	700	90	150	190
XK-13	13.250	17.500	19.000	440	820	1.200	100	190	270
XK-16	13.250	17.500	19.000	440	820	1.200	100	190	270
XK-20	10.000	12.750	14.111	950	1.675	2.000	150	270	400
XK-25	10.000	12.750	14.111	950	1.675	2.000	150	270	400
XK-32	7.500	9.350	11.000	2000	3.150	4.000	270	460	680
XK-36	7.500	9.350	11.000	2000	3.150	4.000	270	460	680

Overall Dimensions

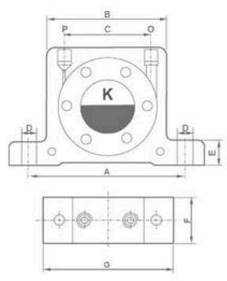

Dimension Sheet

Model	A	B	C	D	E	F	G	P/O
XK-8	68	50	28	7	12	22	86	1/4
XK-10	68	50	28	7	12	22	86	1/4
XK-13	90	65	39	9	16	27	113	1/4
XK-16	90	65	39	9	16	27	113	1/4
XK-20	104	82	57	9	17	38	128	1/4
XK-25	104	82	57	9	17	38	128	1/4
XK-32	130	103	76	11	21	50	160	3/8
XK-36	130	103	76	11	21	50	160	3/8

XR Series Roller Vibrator



XR-50

Feature

This small pneumatic vibrator design is simple,but still gives a strong centrifugal force.Body made from an extruded aluminum,refined steel roll in which thescrolling. This steel roller by the two special high-impact plastic cover positioning. The housing has two horizontal and two vertical holes,making installation easy.Air into two mutually perpendicular intake of an entry.The two air intakes for the standard pipe thread.Is not a block intake,supplied with a pipe plug.

Specifcation

Model	Frequency(V.P.M)			Vibration power(N)			Air consumption(L/min)		
	0.2Mpa	0.4Mpa	0.6Mpa	0.2Mpa	0.4Mpa	0.6Mpa	0.2Mpa	0.4Mpa	0.6Mpa
XR-50	25.150	35.150	36.150	1.175	2.955	4.2550	1.550	1.450	1.950
XR-65	19.150	21.150	26.150	2.755	4.855	6.1550	2.150	3.100	4.150
XR-80	15.650	18.650	19.150	3.150	6.125	7.450	4.500	4.350	5.750
XR-100	11.050	14.150	15.150	3.765	6.750	8.955	5.600	5.550	7.350

XNTP Series Pision Reciprocating Type Ball Vibrator



Feature

Big power with lower noise.
Standard frequency is from 43 to 146 times per minute.
Excitation force is from 150 N to 2039 N.
The frequency and vibration amplitude can be adjusted via regulating the working pressure.
The normal maximum working pressure is 150 degrees centigrade
(We can also make special type, such as 200 degrees centigrade)
The pneumatic hammer can be used for severe environment.

Specifcation

Model	Frequency(V.P.M)			Vibration Power(N)			Air Consumption(L/min)
	0.2MPa	0.4MPa	0.6MPa	0.2MPa	0.4MPa	0.6MPa	
XNTP25	5.840	6.950	8.780	265	435	825	33-108
XNTP32	2.950	4.075	5.045	285	605	925	50-198
XNTP48	2.610	3.450	4.310	780	1.300	2.030	96-336

Overall Dimensions

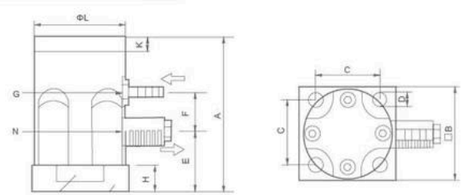

Dimension Sheet

Model	A	B	C	D	E	F	G	H	K	L	N
XNTP25	90	60	46	6.5	36	14.5	G1/8"	15	8	51	G1/8"
XNTP32	140	75	51	11	48	32	G1/4"	20	10	70	G1/4"
XNTP48	194	100	78	13	60	51	G3/8"	25	15	95	G3/8"

XBVP Series Piston Type Pneumatic Hammer



Feature

Product Features

Vibration intensity can be adjusted based on air pressure, can immediately start.stop,fast,low-noise, vibration force, security.

Application:

Feed material conveyor, vibrating screening, vibrating hopper, to help fill packaging,foundry sand mold vibration.

Specifcation

Model	Requency(V.P.M)			Vibration power(N)			Air Consumption(L/min)
	2MPa	4MPa	6MPa	2MPa	4MPa	6MPa	
XBVP-30C	1760	2300	2850	195	380	560	230
XBVP-40C	1330	1670	1870	270	530	720	250
XBVP-50C	1000	1220	1350	400	760	1000	270

Overall Dimensions

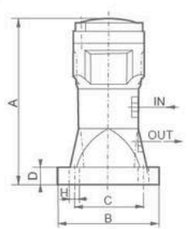

Dimension Sheet

Model	A	B	C	D	H	IN	OUT
XBVP-30C	128	90	68	18	12	1/4"	1/4"
XBVP-40C	160	100	78	18	12	1/4"	1/4"
XBVP-50C	208	140	105	20	16	1/4"	1/4"

XFP-M Series Pision type Pneumatic Hammer



Feature

Product Features

Big power with lower noise
Standard frequency is from 10 to 60 times per minute.Excitation force is from 484 N to 13800N
The frequency and vibration amplitude can be adjusted via regulating the working pressure.
The normal maximum working pressure is 150 degrees centigrade.
(We can also make special type, such as 200 degrees centigrade).
The pneumatic hammer can be used for severe environment.

Application

Hopper feed,Casting industry,Pipelining Compaction.Screening,Conveyer,etc

Structure

Aluminum shell with special high grade grease,long life time,is suitable for different application situation

Specifcation

Model	Frequency x 1000		Vibration Power(N)		Air Consumption(L/min)
	0.2MPa	0.6MPa	0.2MPa	0.6MPa	0.2MPa
XFP-12-M	5	6.7	34	74	0.5
XFP-18-M	4	5.9	68	188	4
XFP-25-M	3	4.2	142	504	23
XFP-35-M	3	4.6	248	1080	24

XSK Series Pneumatic Precussion Hammer



Feature

The main characteristics are: magnetic impact of large powder faling effect; air consumption, low operating cost, energy-saving effect is goof; percussion interval adjustable; quality, reliable, low failure rate; structure is simple, easy removal: innovative designs, chic; piston impate resistance,(can be customized explosion proof). Widely used in pesticides pharmaceuticals, chemicals, cement, dyes, pigments, food, electronics, building materials, mining, environmental protection and other industries, is powerful powder processing line auxiliary equipment.

Specifcation

Model	Operating pressure (MPa)	Air Consumption(L/min)	Wallop kgm/sec
XSK-30	0.3-0.7	0.028	~0.75
XSK-40	0.3-0.7	0.082	~2.2
XSK-60	0.3-0.7	0.228	~7.4
XSK-80	0.4-0.5	0.455	~16.4
XSK-100	0.5-0.7	1.012	~30.0

Overall Dimensions

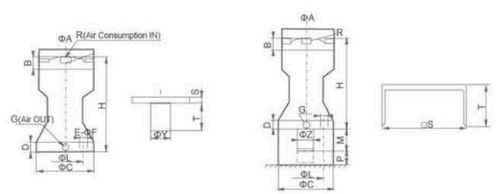

Dimension Sheet

Model	A	B	C	D	E	G	H	L	S	T	Y	R
SK-30	75	10	82	13	9	1/8	132	68	6	50	27	1/4
SK-40	90	12	97	18	11	1/4	162	78	10	60	34	1/4
SK-60	121	13	143	19	15	1/4	215	100	10	60	48	1/4
SK-80	160	17	170	20	17	3/8	260	140	14	90	70	3/8
SK-100	200	18	200	23	17	3/8	318	160	18	90	70	3/8

Other Solenoid Valve / Solenoid Valve Accessories

Model	Product	Specification	Model	Product	Specification
4VXC-08		Valve type:5 port 2 way Orifice size:25mm2(CV=1.40) Fluid Air(to be filtered by 40μ filter element) Acting Inner guide type Pressure range:0.25~1.0MPa Proof pressure:1.2MPa Temperature:5~50°C Voltage range:-10%~+10% Power consumption:AC:5.5VA DC:4.8W Insulation&Protection:F Class & IP65 Max frequency:5 cyclec Min activating time:0.05 secretary	XR2 Valve Group		Fluid medium:Compress Air Motion pattern:Direct acting Type:Normal Close,(2/2,3/2) Orifice:1.2mm Connection port:G1/8" Working pressure:0~0.8Mpa Working temperature:-20℃ ~80℃ Voltage Range:DC6~220V, AC24~220V,50/60Hz±10% Material of Body:Aluminum alloy Seal:NBR
XCZ-110-10-A Small Valve Group		Fluid medium:Compress Air Pattern:Direct acting Type:Normal Close,Two-position Three-way Orifice:0.7mm Connection port:M5 Working pressure:0~0.8Mpa Working temperature:0~60℃ Voltage Range:DC12V~DC24V,±10% Power:≤3W Material of Body:Aluminum Seal:FPM	DL-6A DL-6B DL-6K DL Orifice Adjustable Steam Solenoid Valve		Medium:Water,Steam Pattern:Direct acting Type:Normal Close Orifice:2.5mm(DL-6A,DL-6B)/0~2.5mm(DL-6K) Connection port:G1/4",G1/8" Working pressure:0~0.8Mpa Ambient temperature:0.1~180℃ Voltage:AC24,AC110V,AC220-240V, 50/60Hz,±10% Material of Body:Stainless Steel+Brass Seal:PTFE
Q22XD-2L Q23XD-2L		Port size: M10×1,G1/8" Use Pressure:0.15 to 0.8Mpa Apply Temperature:-5℃ ~50℃	F17 Petrol Solenoid Valve		Fluid medium:Petrol and solvents Motion Pattern:Direct acting Type:Normal Close,Two-position Two-way Orifice:Φ1.8mm,Φ3mm Connection port:Φ4 hose Working pressure:0~0.35Mpa Working temperature:-40℃ ~80℃ Voltage Range:DC12V DC24V Material of Body:POM Seal:VITON
3VKZF-15/10~25/20 3AKZF-15/10~25/20		Working Medium:Air Motion Pattern:Stop Type Aperture of Flow Rate:3V:16mm/25mm 3A:16mm/25mm Port Size,G1/2" / G3/8",G1" / G3/4", Working-pressure:0~1.0MPa Max. Pressure Resistance:1.5MPa Voltage Range:-10%~+10% Material of Body:Aluminum	RSC-1 RSC-2	 **RSC Water Dispenser Series Solenoid Valve G1/8"~G1/4"**	Medium:Water,Gas Medium Temperature:0~100℃ Environment Temperature:0~40℃ Action method:Direct drive Pressure:Normally close 0~8bar Boby material:PP 1/8" black 1/4" white Sealing material:EPDM Heat resistance grade:class B 130℃ Continuous Service:100% Wire Length:30cm(12")
XC601 5/2 3/2 (Armature)		Often used for 4V110 etc and small-sized specia electromagetism valves.	XC603 5/2 3/2 (Armature)		Often used for 4V210, 4V310,4V410 etc valves.
XCB601, 5/2 3/2 (Armature With Base)		Often used for 4V110 etc and small-sized specia electromagetism valves.	XCB603, 5/2 3/2 (Armature With Base)		Often used for 4V210, 4V310,4V410 etc valves.

Solenoid Valve Accessories

Model	Product	Specification	Model	Product	Specification
Coil-110		Coil aperture,Height: Φ8×31 Applicable power and Voltage AC 6VA 12V-220V DC 3W 6V-110V	Coil-210		Coil aperture,Height: Φ9×29 5 Applicable power and Voltage AC 6VA 12V-220V DC 3W 6V-110V
DIN 43650C-AC or DC (Connectors)		Distance:9.4mm Form:2+1 GND Protection Class:IP65 (60529 Situation of IEC) Working Voltage:AC250V DC300V Nominal Current:10A Contact Resistance:≤5Ω Max.Conductor Section:3×0.75mm2 Fixing Screw:M3×25	DIN 43650B-AC or DC (Connectors)		Distance:11mm Form:2+1 GND Protection Class:IP65 (60529 Situation of IEC) Working Voltage:AC250V DC300V Nominal Current:10A Contact Resilstance:≤5mΩ Max.Conductor Section:3×1.5mm2 Fixing Screw:M3×30
DIN 43650A (Connectors)		Distance:18mm Form:2+1 GND Protection Class:IP65(60529 Situation of IEC) Working Voltage:AC250V DC300V Nominal Current:10A Contact Reslstance:≤5mΩ Max.Conductor Section:3×1.5mm2 Fixing Screw:M3×28	2V,2P Series Coil		Coil Aperture,height: Φ9x29.5 Applicable Power And Voltage: AC 8VA 12-220V DC 6 W 6V-110V
2W (UD) Series Coil UD-08		Coil Aperture,height: Φ14X31 Applicable Power And Voltage: AC 28VA 24-380V DC 12 W 6-380V	2W (UD) Coil UD-15		Coil apertu re,Height: Φ16×37 Applicable power and Voltage AC 18VA 24V-380V DC 16W 12V-380V
2W (UW) Series Coil		Coil Aperture,height: Φ16x17 Applicable Power And Voltage: AC 28VA 24-380V DC 24 W 24-380V	2W (2L,US) Large Aperture Coil US-H		Coil Aperture,height: Φ23X55 Applicable Power And Voltage: AC 28VA 24-380V DC 24 W 24-380V
2W(2L,US) Large Aperture Plastic Capsulation Coil		Coil Aperture,height: Φ22x55 Applicable Power And Voltage: AC 28VA 24-380V DC 24 W 24-380V	AB410A		Coil Aperture,height: Φ16X38 Applicable Power And Voltage: AC 28VA 24-380V DC 18 W 12-220V
PU Series Coil		Coil Aperture,height: Φ14.5x42 Applicable Power And Voltage: AC 15VA 24-380V DC 12.5 W 12-110V	VX Series Coil		Coil aperture,Height: Φ11×35 Applicable power and Voltage AC 13VA 12V-380V DC 8W 6V-380V

Soleniod Valve Accessories

Model	Product	Specification	Model	Product	Specification
PU220 Series Diaphragm		PU220-03A PU220-04A PU220-06A PU220-08A	PU225 Series Diaphragm		PU225-03A PU225-04A PU225-06A PU225-08A
2W Series Diaphragm		2W-160-15 2W-200-20 2W-250-25 2W-350-35 2W-400-40 2W-500-50	2L(US) Series Piston		2L-170-10/15/20 2L-200-25 2L-350-35/40 2L-500-50

Explosion-proof Coil& Timer

Model	Product	Specification	Model	
Product No. XC280 Product Type 0980,0981		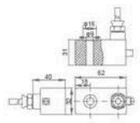	Normal Voltage	AC220V,AC110V,AV24V,DC24V,DV12 Other Voltage can be customized
			Normal Power	AC5.5VA,DC5W Other Power can be customized
			Explosion-proof level	Exm Ⅰ / Ⅱ T4
			Connection Type	Connector Type
			Applicability	EX-proof Solenoid Valve
Product No. XC281 Product Type 1380,1381		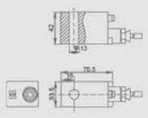 Supply voltage	Normal Voltage	AC220V,AC110V,AV24V,DC24V,DV12V Other Voltage can be customized
			Normal Power	AC5.5VA,DC5W Other Power can be customized
			Explosion-proof level	Exm Ⅰ / Ⅱ T4
			Connection Type	Connector Type Cable
			Applicability	EX-proof Solenoid Valve
Valve Timer-1			Supply voltage Absorption current Operationg temperature Class protection Switch holding voltage Switch capacity Inrush current Duty cycle Switch Life Time ON Time OFF Indicators Manual override Termination	24..240V AC/DC-50Hz/60Hz for"CE"marked Timer 4 mA max -10℃ +50℃ IP65-EN60529 400V Max 1A 10A for 10ms 100% ED 3×108 From 0.5 to 10s. From 0.5 to 45s. Yellow LED Test DIN43650A

E

XCPC®

Pneumatic Accessories

Users usually overlook these accessories, but they are most necessary element in pneumatic system. XCPC knows the importance of these small parts, we never give up the high quality standard. The pneumaticaccessories we can offer is plastic fittings, brass fittings, quick connectors, pipe fittings, quick couplers, air pipe(PU/PE/PA) and air guns etc.



Pneumatic Tube Fittings

Feature

- One-Touch push-to-connect configuration allows an instant tubing connection.
- Smooth-Edge release sleeve design facilitates a quick tubing disconnection.
- Aesthetically pleasing nickel-plated metallic optional feature ensures anti-corrosion and anti-containation properties of an extended product life.
- Pre-applied sealant on all external threads eliminates the additional sealing requirement.
- Internal and/of external flat-to-flat hexagonal configurations for both metric and inch specifications allow a proper tightening or directional orientation upon installation by using L key or allen wrench for the applicable model types.

Construction

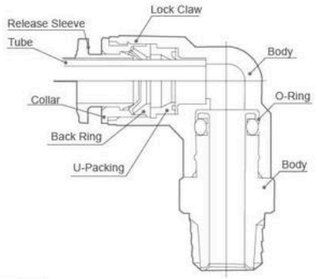

Specifcation

Fliud Type	Air,Vacuum
Operating Pressure	0~10.2Kgf/cm²(0~1.0Mpa)
Negative Pressure	-750mm Hg(10Torr)
Operating Temperature Range	0~60℃
Tube Material	Nylon and Polyurethane

Ordering Code

XPC — 08 (1) — 02 (2) — □ (3) (4)

(1)Model Type

(2)Tube Outer Diameter(ΦD)

Metric Tube							Inch Tube			
Code	04	06	08	10	12	14	16	1/4"	5/16"	3/8"	□
ΦD	4mm	6mm	8mm	10mm	12mm	14mm	16mm	1/4"	5/16"	3/8"	□

(3)Thread Type & Size

■ **Metric Size**

Metric Size			
Code	M5	M6	M8
Size	M5×0.8	M6×1	M8×1

■ **Taper Pipe Thread**

R(PT)Thread				
Code	01	02	03	04
Size	R1/8"	R1/4"	R3/8"	R1/2"

■ **Inch Thread**

G(PP)Thread				
Code	G01	G02	G03	G04
Size	G1/8"	G1/4"	G3/8"	G1/2"

■ **NPT Thread**

NPT Thread				
Code	N1	N2	N3	N4
Size	NPT1/8"	NPT1/4"	NPT3/8"	NPT1/2"

(4)Body Color Code

■ NO Code:Black Color GC:Grey Color

XPC



MODEL(ΦD-T)

Tube(Metric)-Thread(R)			Tube(Inch)-Thread(R)		Tube(Inch)-Thread(NPT)		
XPC 04-M5	XPC 06-04	XPC 12-02	XPC 1/4-01	XPC 3/8-04	XPC 5/32-U	XPC 1/4-N2	XPC 1/2-N2
XPC 04-M6	XPC 08-01	XPC 12-03	XPC 1/4-02	XPC 1/2-02	XPC 5/32-N1	XPC 1/4-N3	XPC 1/2-N3
XPC 04-01	XPC 08-02	XPC 12-04	XPC 1/4-03	XPC 1/2-03	XPC 5/32-N2	XPC 5/16-N1	XPC 1/2-N4
XPC 04-02	XPC 08-03	XPC 14-03	XPC 5/16-01	XPC 1/2-04	XPC 3/16-U	XPC 5/16-N2	
XPC 06-M5	XPC 08-04	XPC 14-04	XPC 5/16-02		XPC 3/16-N1	XPC 5/16-N3	
XPC 06-M6	XPC 10-01	XPC 16-03	XPC 5/16-03		XPC 3/16-N2	XPC 3/8-N1	
XPC 06-01	XPC 10-02	XPC 16-04	XPC 3/8-01		XPC 3/16-N3	XPC 3/8-N2	
XPC 06-02	XPC 10-03		XPC 3/8-02		XPC 1/4-U	XPC 3/8-N3	
XPC 06-03	XPC 10-04		XPC 3/8-03		XPC 1/4-N1	XPC 3/8-N4	

XPOC



MODEL(ΦD-T)

Tube(Metric)-Thread(R)			Tube(Inch)-Thread(R)	Tube(Inch)-Thread(NPT)	
XPOC 04-M5	XPOC 06-03	XPOC 10-04	XPOC 1/4-01	XPOC 5/32-U	XPOC 3/8-N2
XPOC 04-M6	XPOC 08-01	XPOC 12-02	XPOC 1/4-02	XPOC 5/32-N1	XPOC 3/8-N3
XPOC 04-01	XPOC 08-02	XPOC 12-03	XPOC 5/16-01	XPOC 1/4-U	XPOC 3/8-N4
XPOC 04-02	XPOC 08-03	XPOC 12-04	XPOC 5/16-02	XPOC 1/4-N1	XPOC 1/2-N2
XPOC 06-M5	XPOC 08-04	XPOC 14-03	XPOC 5/16-03	XPOC 1/4-N2	XPOC 1/2-N3
XPOC 06-M6	XPOC 10-01	XPOC 14-04	XPOC 3/8-02	XPOC 5/16-N1	XPOC 1/2-N4
XPOC 06-01	XPOC 10-02	XPOC 16-03	XPOC 3/8-03	XPOC 5/16-N2	
XPOC 06-02	XPOC 10-03	XPOC 16-04	XPOC 3/8-04	XPOC 5/16-N3	

Pneumatic Tube Fittings

XPL



MODEL(ΦD-T)

Tube(Metric)-Thread(R)			Tube(Inch)-Thread(R)		Tube(Inch)-Thread(NPT)		
XPL 04-M5	XPL 06-04	XPL 12-02	XPL 1/4-01	XPL 3/8-04	XPL 5/32-U	XPL 1/4-N2	XPL 1/2-N2
XPL 04-M6	XPL 08-01	XPL 12-03	XPL 1/4-02	XPL 1/2-02	XPL 5/32-N1	XPL 1/4-N3	XPL 1/2-N3
XPL 04-01	XPL 08-02	XPL 12-04	XPL 1/4-03	XPL 1/2-03	XPL 5/32-N2	XPL 5/16-N1	XPL 1/2-N4
XPL 04-02	XPL 08-03	XPL 14-03	XPL 5/16-01	XPL 1/2-04	XPL 3/16-U	XPL 5/16-N2	
XPL 06-M5	XPL 08-04	XPL 14-04	XPL 5/16-02		XPL 3/16-N1	XPL 5/16-N3	
XPL 06-M6	XPL 10-01	XPL 16-03	XPL 5/16-03		XPL 3/16-N2	XPL 3/8-N1	
XPL 06-01	XPL 10-02	XPL 16-04	XPL 3/8-01		XPL 3/16-N3	XPL 3/8-N2	
XPL 06-02	XPL 10-03		XPL 3/8-02		XPL 1/4-U	XPL 3/8-N3	
XPL 06-03	XPL 10-04		XPL 3/8-03		XPL 1/4-N1	XPL 3/8-N4	

XPLL



MODEL(ΦD-T)

Tube(Metric)-Thread(R)			Tube(Inch)-Thread(R)	Tube(Inch)-Thread(NPT)	
XPLL 04-M5	XPLL 06-04	XPLL 12-02	XPLL 1/4-01	XPLL 5/32-U	XPLL 5/16-N2
XPLL 04-M6	XPLL 08-01	XPLL 12-03	XPLL 1/4-02	XPLL 5/32-N1	XPLL 5/16-N3
XPLL 04-01	XPLL 08-02	XPLL 12-04	XPLL 5/16-02	XPLL 3/16-N1	XPLL 3/8-N2
XPLL 04-02	XPLL 08-03	XPLL 14-03	XPLL 3/8-02	XPLL 3/16-N2	XPLL 3/8-N3
XPLL 06-M5	XPLL 08-04	XPLL 14-04	XPLL 3/8-03	XPLL 3/16-N3	XPLL 3/8-N4
XPLL 06-M6	XPLL 10-01	XPLL 16-03		XPLL 1/4-N1	XPLL 1/2-N2
XPLL 06-01	XPLL 10-02	XPLL 16-04		XPLL 1/4-N2	XPLL 1/2-N3
XPLL 06-02	XPLL 10-03			XPLL 1/4-N3	XPLL 1/2-N4
XPLL 06-03	XPLL 10-04			XPLL5/16-N1	

XPLF



MODEL(ΦD-T)

Tube(Metric)-Thread(R)			Tube(Inch)-Thread(R)	
XPLF 04-M5	XPLF 08-01	XPLF 12-03	XPLF 5/32-N1	XPLF 3/8-N3
XPLF 04-M6	XPLF 08-02	XPLF 12-04	XPLF 3/16-N1	XPLF 1/2-N3
XPLF 04-01	XPLF 08-03	XPLF 14-03	XPLF 3/16-N2	XPLF 1/2-N4
XPLF 04-02	XPLF 08-04	XPLF 14-04	XPLF 1/4-N1	
XPLF 06-M5	XPLF 10-01	XPLF 16-03	XPLF 1/4-N2	
XPLF 06-M6	XPLF 10-02	XPLF 16-04	XPLF 5/16-N1	
XPLF 06-01	XPLF 10-03		XPLF 5/16-N2	
XPLF 06-02	XPLF 10-04		XPLF 5/16-N3	
XPLF 06-03	XPLF 12-02		XPLF 3/8-N2	

XPCF



MODEL(ΦD-T)

Tube(Metric)-Thread(R)		Tube(Inch)-Thread(R)	Tube(Inch)-Thread(NPT)	
XPCF 04-01	XPCF 10-01	XPCF 1/4-01	XPCF 5/32-N1	XPCF 3/8-N2
XPCF 04-02	XPCF 10-02	XPCF 1/4-02	XPCF 5/32-N2	XPCF 3/8-N3
XPCF 06-01	XPCF 10-03	XPCF 5/16-01	XPCF 3/16-N1	XPCF 1/2-N2
XPCF 06-02	XPCF 10-04	XPCF 5/16-02	XPCF 3/16-N2	XPCF 1/2-N3
XPCF 06-03	XPCF 12-02	XPCF 3/8-02	XPCF 1/4-N1	
XPCF 08-01	XPCF 12-03	XPCF 3/8-03	XPCF 1/4-N2	
XPCF 08-02	XPCF 12-04		XPCF 5/16-N1	
XPCF 08-03	XPCF 16-03		XPCF 5/16-N2	
XPCF 08-04	XPCF 16-04		XPCF 5/16-N3	

XPB



MODEL(ΦD-T)

Tube(Metric)-Thread(R)			Tube(Inch)-Thread(R)		Tube(Inch)-Thread(NPT)		
XPB 04-M5	XPB 06-04	XPB 12-02	XPB 1/4-01	XPB 3/8-04	XPB 5/32-U	XPB 1/4-N2	XPB 1/2-N2
XPB 04-M6	XPB 08-01	XPB 12-03	XPB 1/4-02	XPB 1/2-02	XPB 5/32-N1	XPB 1/4-N3	XPB 1/2-N3
XPB 04-01	XPB 08-02	XPB 12-04	XPB 1/4-03	XPB 1/2-03	XPB 5/32-N2	XPB 5/16-N1	XPB 1/2-N4
XPB 04-02	XPB 08-03	XPB 14-03	XPB 5/16-01	XPB 1/2-04	XPB 3/16-U	XPB 5/16-N2	
XPB 06-M5	XPB 08-04	XPB 14-04	XPB 5/16-02		XPB 3/16-N1	XPB 5/16-N3	
XPB 06-M6	XPB 10-01	XPB 16-03	XPB 5/16-03		XPB 3/16-N2	XPB 3/8-N1	
XPB 06-01	XPB 10-02	XPB 16-04	XPB 3/8-01		XPB 3/16-N3	XPB 3/8-N2	
XPB 06-02	XPB 10-03		XPB 3/8-02		XPB 1/4-U	XPB 3/8-N3	
XPB 06-03	XPB 10-04		XPB 3/8-03		XPB 1/4-N1	XPB 3/8-N4	

Pneumatic Tube Fittings

XPD



MODEL(ΦD-T)

Tube(Metric)-Thread(R)			Tube(Inch)-Thread(R)		Tube(Inch)-Thread(NPT)		
XPD 04-M5	XPD 06-04	XPD 12-02	XPD 1/4-01	XPD 3/8-04	XPD 5/32-U	XPD 1/4-N2	XPD 1/2-N2
XPD 04-M6	XPD 08-01	XPD 12-03	XPD 1/4-02	XPD 1/2-02	XPD 5/32-N1	XPD 1/4-N3	XPD 1/2-N3
XPD 04-01	XPD 08-02	XPD 12-04	XPD 1/4-03	XPD 1/2-03	XPD 5/32-N2	XPD 5/16-N1	XPD 1/2-N4
XPD 04-02	XPD 08-03	XPD 14-03	XPD 5/16-01	XPD 1/2-04	XPD 3/16-U	XPD 5/16-N2	
XPD 06-M5	XPD 08-04	XPD 14-04	XPD 5/16-02		XPD 3/16-N1	XPD 5/16-N3	
XPD 06-M6	XPD 10-01	XPD 16-03	XPD 5/16-03		XPD 3/16-N2	XPD 3/8-N1	
XPD 06-01	XPD 10-02	XPD 16-04	XPD 3/8-01		XPD 3/16-N3	XPD 3/8-N2	
XPD 06-02	XPD 10-03		XPD 3/8-02		XPD 1/4-U	XPD 3/8-N3	
XPD 06-03	XPD 10-04		XPD 3/8-03		XPD 1/4-N1	XPD 3/8-N4	

XPX



MODEL(ΦD-T)

Tube(Metric)-Thread(R)			Tube(Inch)-Thread(R)		Tube(Inch)-Thread(NPT)		
XPX 04-M5	XPX 06-04	XPX 12-02	XPX 1/4-01	XPX 3/8-04	XPX 5/32-U	XPX 1/4-N2	XPX 1/2-N2
XPX 04-M6	XPX 08-01	XPX12-03	XPX 1/4-02	XPX 1/2-02	XPX 5/32-N1	XPX 1/4-N3	XPX 1/2-N3
XPX 04-01	XPX 08-02	XPX 12-04	XPX 1/4-03	XPX 1/2-03	XPX 5/32-N2	XPX 5/16-N1	XPX 1/2-N4
XPX 04-02	XPX 08-03		XPX 5/16-01	XPX 1/2-04	XPX 3/16-U	XPX 5/16-N2	
XPX 06-M5	XPX 08-04		XPX 5/16-02		XPX 3/16-N1	XPX 5/16-N3	
XPX 06-M6	XPX 10-01		XPX 5/16-03		XPX 3/16-N2	XPX 3/8-N1	
XPX 06-01	XPX 10-02		XPX 3/8-01		XPX 3/16-N3	XPX 3/8-N2	
XPX 06-02	XPX 10-03		XPX 3/8-02		XPX 1/4-U	XPX 3/8-N3	
XPX 06-03	XPX 10-04		XPX 3/8-03		XPX 1/4-N1	XPX 3/8-N4	

XPKB



MODEL(ΦD-T)

Tube(Inch)-Thread(R)
XPKB 04-01
XPKB 04-02
XPKB 06-01
XPKB 06-02
XPKB 06-03
XPKB 08-01
XPKB 08-02
XPKB 08-03

XPKD



MODEL(ΦD-T)

Tube(Inch)-Thread(R)	
XPKD 06-04-01	XPKD 3/16-5/32-N1
XPKD 08-04-02	XPKD 1/4-5/32-N1
XPKD 08-06-02	XPKD 5/16-5/32-N2
XPKD 10-08-03	XPKD 5/16-1/4-N2
	XPKD 3/8-5/16-N3

XPH



MODEL(ΦD-T)

Tube(Metric)-Thread(R)			Tube(Inch)-Thread(R)	Tube(Inch)-Thread(NPT)	
XPH 04-M5	XPH 08-01	XPH 12-04	XPH 1/4-05	XPH 5/32-U	XPH 5/16-N3
XPH 04-M6	XPH 08-02		XPH 1/4-01	XPH 5/32-N1	XPH 3/8-N2
XPH 04-01	XPH 08-03		XPH 1/4-02	XPH 3/16-U	XPH 3/8-N3
XPH 04-02	XPH 08-04		XPH 5/16-01	XPH 3/16-N1	XPH1/2-N3
XPH 06-M5	XPH 10-02		XPH 5/16-02	XPH 3/16-N2	XPH1/2-N4
XPH 06-M6	XPH 10-03		XPH 5/16-03	XPH 1/4-N1	
XPH 06-01	XPH 10-04		XPH 3/8-02	XPH 1/4-N2	
XPH 06-02	XPH 12-02		XPH 3/8-03	XPH 5/16-N1	
XPH 06-03	XPH 12-03			XPH 5/16-N2	

XPHF



MODEL(ΦD-T)

Tube(Metric)-Thread(R)			Tube(Inch)-Thread(R)	Tube(Inch)-Thread(NPT)	
XPHF 04-M5	XPHF 08-01	XPHF 12-04	XPHF 1/4-M5	XPHF 5/32-U	XPHF 5/16-N3
XPHF 04-M6	XPHF 08-02		XPHF 1/4-01	XPHF 5/32-N1	XPHF 3/8-N2
XPHF 04-01	XPHF 08-03		XPHF 1/4-02	XPHF 3/16-U	XPHF 3/8-N3
XPHF 04-02	XPHF 08-04		XPHF 5/16-01	XPHF 3/16-N1	XPHF 1/2-N3
XPHF 06-M5	XPHF 10-02		XPHF 5/16-02	XPHF 3/16-N2	XPHF 1/2-N4
XPHF 06-M6	XPHF 10-03		XPHF 5/16-03	XPHF 1/4-N1	
XPHF 06-01	XPHF 10-04		XPHF 3/8-02	XPHF 1/4-N2	
XPHF 06-02	XPHF 12-02		XPHF 3/8-03	XPHF 5/16-N1	
XPHF 06-03	XPHF 12-03			XPHF 5/16-N2	

Pneumatic Tube Fittings

XPMF



MODEL(ΦD-T)

Tube(Metric)-Thread(RC)		Tube(Inch)-Thread(NPT)	
XPMF 04-01	XPMF 10-01	XPMF 5/32-N1	XPMF 3/8-N3
XPMF 04-02	XPMF 10-02	XPMF 3/16-N1	XPMF 1/2-N3
XPMF 06-01	XPMF 10-03	XPMF 3/16-N2	XPMF 1/2-N4
XPMF 06-02	XPMF 10-04	XPMF 1/4-N1	
XPMF 06-03	XPMF 12-02	XPMF 1/4-N2	
XPMF 08-01	XPMF 12-03	XPMF 5/16-N1	
XPMF 08-02	XPMF 12-04	XPMF 5/16-N2	
XPMF 08-03	XPMF 14-04	XPMF 5/16-N3	
XPMF 08-04	XPMF 16-04	XPMF 3/8-N2	

XPGJ



MODEL(ΦD1-ΦD2)

Tube(Metric)-Thread(R)	Tube(Inch)-Thread(R)	Tube(Inch)-Thread(NPT)
XPGJ 06-04	XPGJ 08-1/4	XPGJ 1/4-5/32
XPGJ 08-04	XPGJ 10-1/4	XPGJ 5/16-5/32
XPGJ 08-06	XPGJ 10-5/16	XPGJ 5/16-1/4
XPGJ 10-06	XPGJ 12-1/4	XPGJ 3/8-1/4
XPGJ 10-08	XPGJ 12-5/16	XPGJ 3/8-5/16
XPGJ 12-06		XPGJ 1/2-1/4
XPGJ 12-08		XPGJ 1/2-5/16
XPGJ 12-10		XPGJ 1/2-3/8

XPLJ



MODEL(ΦD)

Tube(Metric)	Tube(Inch)
XPLJ 04	XPLJ 5/32
XPLJ 06	XPLJ 3/16
XPLJ 08	XPLJ 1/4
XPLJ 10	XPLJ 5/16
XPLJ 12	XPLJ 3/8
	XPLJ 1/2

XPLGJ



MODEL(ΦD1-ΦD2)

Tube(Metric)	Tube(Inch)
XPLGJ 06-04	XPLGJ 3/16-5/32
XPLGJ 08-06	XPLGJ 1/4-5/32
XPLGJ 10-08	XPLGJ 1/4-3/16
XPLGJ 12-10	XPLGJ 5/16-1/4
	XPLGJ 3/8-5/16
	XPLGJ 1/2-3/8

XPYJ



MODEL(ΦD)

Tube(Metric)	Tube(Inch)
XPYJ 04	XPYJ 5/32
XPYJ 06	XPYJ 3/16
XPYJ 08	XPYJ 1/4
XPYJ 10	XPYJ 5/16
XPYJ 12	XPYJ 3/8
	XPYJ 1/2

XPWJ



MODEL(ΦD1-ΦD2)

Tube(Metric)	Tube(Inch)
XPWJ 06-04	XPWJ 1/4-5/32
XPWJ 08-06	XPWJ 5/16-1/4
XPWJ 10-08	XPWJ 3/8-5/16
XPWJ 12-10	XPWJ 1/2-3/8

XPIJ



MODEL(ΦD)

Tube(Metric)	Tube(Inch)
XPIJ 04	XPIJ 5/32
XPIJ 06	XPIJ 3/16
XPIJ 08	XPIJ 1/4
XPIJ 10	XPIJ 5/16
XPIJ 12	XPIJ 3/8
XPIJ 16	XPIJ 1/2

XPKJ



MODEL(ΦD1-ΦD2)

Tube(Metric)	Tube(Inch)
XPKJ 06-04	XPKJ 3/16-5/32
XPKJ 08-04	XPKJ 1/4-5/32
XPKJ 08-06	XPKJ 5/16-5/32
XPKJ 10-06	XPKJ 5/16-3/16
XPKJ 10-08	XPKJ 5/16-1/4
	XPKJ 3/8-1/4
	XPKJ 3/8-5/16

Pneumatic Tube Fittings

XPDJ



MODEL(ΦD)	
Tube(Metric)	
XPDJ 04	XPDJ 08-06
XPDJ 06	XPDJ 10-08
XPDJ 08	XPDJ 12-10
XPDJ 10	
XPDJ 12	
XPDJ 06-04	

XPSJ



MODEL(ΦD1-ΦD2)	
Tube(Metric)	Tube(Inch)
XPSJ 06-04	XPSJ 1/4-5/32
XPSJ 08-06	XPSJ 5-16-1/4
XPSJ 10-08	XPSJ 3/8-5-16
XPSJ 12-10	XPSJ 1-2-3/8

XPTJ



MODEL(ΦD1-ΦD2)	
Tube(Metric)	Tube(Inch)
XPTJ 06-04	XPTJ 1/4-5/32
XPTJ 08-06	XPTJ 5/16-1/4
XPTJ 10-08	XPTJ 3/8-5/16
XPTJ 12-10	XPTJ 1/2-3/8

XPP



MODEL(ΦD)	
Tube(Metric)	Tube(Inch)
XPP 04	XPP 5/32
XPP 06	XPP 3/16
XPP 08	XPP 1/4
XPP 10	XPP 5/16
XPP 12	XPP 3/8
XPP 16	XPP 1/2

XPIG



MODEL(ΦD1-ΦD2)	
Tube(Metric)	Tube(Inch)
XPIG 06-04	XPIG 3/16-5/32
XPIG 08-06	XPIG 1/4-5/32
XPIG 10-08	XPIG 1/4-3/16
XPIG 12-10	XPIG 5/16-1/4
XPIG 16-12	XPIG 3/8-5/16
	XPIG 1/2-3/8

XPM



MODEL(ΦD)	
Tube(Metric)	Tube(Inch)
XPM 04	XPM 5/32
XPM 06	XPM 3/16
XPM 08	XPM 1/4
XPM 10	XPM 5/16
XPM 12	XPM 3/8
XPM 14	XPM 1/2
XPM 16	

XPZA



MODEL(ΦD)	
Tube(Metric)	Tube(Inch)
XPZA 04	XPZA 5/32
XPZA 06	XPZA 3/16
XPZA 08	XPZA 1/4
XPZA 10	XPZA 5/16
XPZA 12	XPZA 3/8
	XPZA 1/2

XPKG



MODEL(ΦD1-ΦD2)	
Tube(Metric)	Tube(Inch)
XPKG 06-04	XPKG 3/16-5/32
XPKG 08-04	XPKG 1/4-5/32
XPKG 08-06	XPKG 5/16-5/32
XPKG 10-06	XPKG 3/16-3/16
XPKG 10-08	XPKG 5/16-1/4
	XPKG 3/8-1/4
	XPKG 3/8-5/16

XPK



MODEL(ΦD)	
Tube(Metric)	Tube(Inch)
XPK 04	XPK 5/32
XPK06	XPK 3/16
XPK 08	XPK 1/4
	XPK 5/16

XPLM



MODEL(ΦD)
Tube(Metric)
XPLM 04
XPLM06
XPLM08
XPLM10
XPLM12

Pneumatic Tube Fittings

XPPF



MODEL(ΦD)
Tube(Metric)
XPPF04
XPPF06
XPPF07
XPPF08
XPPF10
XPPF12

XPU



MODEL(ΦD)	
Tube(Metric)	Tube(Inch)
XPU 04	XPU 5/32
XPU 06	XPU 3/16
XPU 08	XPU 1/4
XPU 10	XPU 5/16
XPU 12	XPU 3/8
XPU 14	XPU 1/2
XPU 16	

XPV



MODEL(ΦD)	
Tube(Metric)	Tube(Inch)
XPV 04	XPV 5/32
XPV 06	XPV 3/16
XPV 08	XPV 1/4
XPV 10	XPV 5/16
XPV 12	XPV 3/8
XPV 14	XPV 1/2
XPV 16	

XPE



MODEL(ΦD)	
Tube(Metric)	Tube(Inch)
XPE 04	XPE 5/32
XPE 06	XPE 3/16
XPE 08	XPE 1/4
XPE 10	XPE 5/16
XPE 12	XPE 3/8
XPE 14	XPE 1/2
XPE 16	

XPY



MODEL(ΦD-T)	
Tube(Metric)	Tube(Inch)
XPY 04	XPY 5/32
XPY 06	XPY 3/16
XPY 08	XPY 1/4
XPY 10	XPY 5/16
XPY 12	XPY 3/8
	XPY 1/2

XPG



MODEL(ΦD1-ΦD2)	
Tube(Metric)	Tube(Inch)
XPG 06-04	XPG 3/16-5/32
XPG 08-04	XPG 1/4-5/32
XPG 08-06	XPG 1/4-3/16
XPG 10-06	XPG 5/16-1/4
XPG 10-08	XPG 3/8-5/16
XPG 12-10	XPG 1/2-3/8
XPG 16-12	
XPG 16-14	

XPGE



MODEL(ΦD1-ΦD2)	
Tube(Metric)	Tube(Inch)
XPGE 06-04	XPGE 1/4-5/32
XPGE 08-06	XPGE 5/16-1/4
XPGE 10-08	XPGE 3/8/5/16
XPGE 12-10	XPGE 1/2-3/8
XPGE 16-12	

XPEG



MODEL(ΦD1-ΦD2)	
Tube(Metric)	Tube(Inch)
XPEG 06-04	XPEG 1/4-5/32
XPEG 08-06	XPEG 5/16-1/4
XPEG 10-08	XPEG 3/8-5/16
XPEG 12-10	XPEG 1/2-3/8
XPEG 16-12	

XPW



MODEL(ΦD)	
Tube(Metric)	Tube(Inch)
XPW 06-04	XPW 3/16-5/32
XPW 08-06	XPW 1/4-5/32
XPW 10-08	XPW 1/4-3/16
XPW 12-10	XPW 5/16-1/4
	XPW 3/8-5/16
	XPW 1/2-3/8

Pneumatic Tube Fittings With G Thread(o-ring)

XPC-G



MODEL(ΦD-T)		
Tube(Metric)-Thread(G)		
XPC04-G01	XPC08-G02	XPC12-G02
XPC04-G02	XPC08-G03	XPC12-G03
XPC06-G01	XPC08-G04	XPC12-G04
XPC06-G02	XPC10-G01	XPC14-G03
XPC06-G03	XPC10-G02	XPC14-G04
XPC06-G04	XPC10-G03	XPC16-G03
XPC08-G01	XPC10-G04	XPC16-G04

XPL-G



MODEL(ΦD-T)		
Tube(Metric)-Thread(G)		
XPL04-G01	XPL08-G02	XPL12-G02
XPL04-G02	XPL08-G03	XPL12-G03
XPL06-G01	XPL08-G04	XPL12-G04
XPL06-G02	XPL10-G01	XPL14-G03
XPL06-G03	XPL10-G02	XPL14-G04
XPL06-G04	XPL10-G03	XPL16-G03
XPL08-G01	XPL10-G04	XPL16-G04

XPB-G



MODEL(ΦD-T)		
Tube(Metric)-Thread(G)		
XPB04-G01	XPB08-G02	XPB12-G02
XPB04-G02	XPB08-G03	XPB12-G03
XPB06-G01	XPB08-G04	XPB12-G04
XPB06-G02	XPB10-G01	XPB14-G03
XPB06-G03	XPB10-G02	XPB14-G04
XPB06-G04	XPB10-G03	XPB16-G03
XPB08-G01	XPB10-G04	XPB16-G04

XPD-G



MODEL(ΦD-T)		
Tube(Metric)-Thread(G)		
XPD04-G01	XPD08-G02	XPD12-G02
XPD04-G02	XPD08-G03	XPD12-G03
XPD06-G01	XPD08-G04	XPD12-G04
XPD06-G02	XPD10-G01	XPD14-G03
XPD06-G03	XPD10-G02	XPD14-G04
XPD06-G04	XPD10-G03	XPD16-G03
XPD08-G01	XPD10-G04	XPD16-G04

XPLH-G



MODEL(ΦD-T)	
Tube(Metric)-Thread(G)	
XPLH 04-G01	XPLH 10-G01
XPLH 04-G02	XPLH 10-G02
XPLH 06-G01	XPLH 10-G03
XPLH 06-G02	XPLH 10-G04
XPLH 06-G03	XPLH 12-G02
XPLH 06-G04	XPLH 12-G03
XPLH 08-G01	XPLH 12-G04
XPLH 08-G02	
XPLH 08-G03	
XPLH 08-G04	

XPLL-G



MODEL(ΦD-T)	
Tube(Metric)-Thread(G)	
XPLL 04-G01	XPLL 10-G01
XPLL 04-G02	XPLL 10-G02
XPLL 06-G01	XPLL 10-G03
XPLL 06-G02	XPLL 10-G04
XPLL 06-G03	XPLL 12-G02
XPLL 06-G04	XPLL 12-G03
XPLL 08-G01	XPLL 12-G04
XPLL 08-G02	XPLL 14-G04
XPLL 08-G03	XPLL 16-G03
XPLL 08-G04	XPLL 16-G04

Pneumatic Tube Fittings With G Thread(o-ring)

XPX-G



MODEL(ΦD-T)	
Tube(Metric)-Thread(G)	
XPX 04-G01	XPX 08-G04
XPX 04-G02	XPX 10-G01
XPX 06-G01	XPX 10-G02
XPX 06-G02	XPX 10-G03
XPX 06-G03	XPX 10-G04
XPX 06-G04	XPX 12-G02
XPX 08-G01	XPX 12-G03
XPX 08-G02	XPX 12-G04
XPX 08-G03	

XPKD-G



MODEL(ΦD1-ΦD2-T)
Tube(Metric)-Thread(G)
XPKD 06-04-G01
XPKD 08-04-G02
XPKD 08-06-G02
XPKD 10-08-G03

Pneumatic Tube Fittings With G Thread(o-ring)

XPH-G



MODEL(ΦD-T)	
Tube(Metric)-Thread(G)	
XPH 04-G01	XPH 10-G02
XPH 06-G01	XPH 10-G03
XPH 06-G02	XPH 12-G03
XPH 08-G01	XPH 12-G04
XPH 08-G02	
XPH 08-G03	

XPHF-G



MODEL(ΦD-T)	
Tube(Metric)-Thread(G)	
XPHF 04-G01	XPHF 10-G02
XPHF 06-G01	XPHF 10-G03
XPHF 06-G02	XPHF 12-G03
XPHF 08-G01	XPHF 12-G04
XPHF 08-G02	
XPHF 08-G03	

XPCF-G



MODEL(ΦD-T)	
Tube(Metric)	Tube(Inch)
XPCF 04-G01	XPCF 10-G02
XPCF 04-G02	XPCF 10-G03
XPCF 06-G01	XPCF 10-G04
XPCF 06-G02	XPCF 12-G02
XPCF 06-G03	XPCF 12-G03
XPCF 08-G01	XPCF 12-G04
XPCF 08-G02	XPCF 14-G03
XPCF 08-G03	XPCF 14-G04
XPCF 08-G04	XPCF 16-G03
XPCF 10-G01	XPCF 16-G04

XPLF-G



MODEL(ΦD-T)	
Tube(Metric)	Tube(Inch)
XPLF 04-G01	XPLF 10-G02
XPLF 04-G02	XPLF 10-G03
XPLF 06-G01	XPLF 10-G04
XPLF 06-G02	XPLF 12-G02
XPLF 06-G03	XPLF 12-G03
XPLF 08-G01	XPLF 12-G04
XPLF 08-G02	XPLF 14-G03
XPLF 08-G03	XPLF 14-G04
XPLF 08-G04	XPLF 16-G03
XPLF 10-G01	XPLF 16-G04

XPOC-G



MODEL(ΦD-T)	
Tube(Metric)	
XPOC 04-G01	XPOC 10-G01
XPOC 04-G02	XPOC 10-G02
XPOC 06-G01	XPOC 10-G03
XPOC 06-G02	XPOC 10-G04
XPOC 06-G03	XPOC 12-G02
XPOC 06-G04	XPOC 12-G03
XPOC 08-G01	XPOC 12-G04
XPOC 08-G02	XPOC 14-G04
XPOC 08-G03	XPOC 16-G03
XPOC 08-G04	XPOC 16-G04

Speed Controls

Feature

- Accurate regulation of an optimal airflow rate for precise motioncontrol.
- Compact and space-saving configuration provides a functionally wide range of airflow rates.
- Available in control method type for metering of unidirecrional airflow either entering into or exhausting out of a driving device.

Specifcation

Fliud Type	Air,Vacuum
Operating Pressure	0~10.2Kgf/cm²(0~1.0Mpa)
Negative Pressure	-750mm Hg(10Torr)
Operating Temperature Range	0~60℃
Tube Material	Nylon and Polyurethane

Ordering Code

XJSC | 08 | 02

(1) (2) (3)

(1)Model Type

(2)Tube Outer Diameter(ΦD)

Metric Tube							
Code	04	06	08	10	12	14	16
ΦD	4mm	6mm	8mm	10mm	12mm	14mm	16mm

Construction

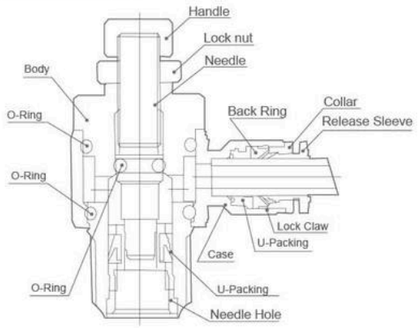

(3)Thread Type & Size

Metric Size			R(PT)Thread			
Code	M5	M6	01	02	03	04
ΦD	M5×0.8	M6×1	R1/8"	R1/4"	R3/8"	R1/2"

G(PF)Thread				
Code	G01	G02	G03	G04
Size	G1/8"	G1/4"	G3/8"	G1/2"

XJSC



MODEL(ΦD-T)

Tube(Metric)-Thread(R)			Tube(Inch)-Thread(R)		Tube(Inch)-Thread(NPT)		
XJSC 04-M5	XJSC 06-04	XJSC 10-03	XJSC 1/4-M5	XJSC 5/16-02	XJSC 5/32-U	XJSC 1/4-N1	XJSC 3/8-N2
XJSC 04-01	XJSC 08-01	XJSC 10-04	XJSC 1/4-01	XJSC 5/16-03	XJSC 5/32-N1	XJSC 1/4-N2	XJSC 3/8-N3
XJSC 04-02	XJSC 08-02	XJSC 12-02	XJSC 1/4-02	XJSC 3/8-02	XJSC 3/16-U	XJSC 1/4-N3	XJSC 3/8-N4
XJSC 06-M5	XJSC 08-03	XJSC 12-03	XJSC 5/16-01	XJSC 3/8-03	XJSC 3/16-N1	XJSC 5/16-N1	XJSC 1/2-N3
XJSC 06-01	XJSC 08-04	XJSC 12-04			XJSC 3/16-N2	XJSC 5/16-N2	XJSC 1/2-N4
XJSC 06-02	XJSC 10-01				XJSC 3/16-N3	XJSC 5/16-N3	
XJSC 06-03	XJSC 10-02				XJSC 1/4-U	XJSC 5/16-N4	

XJSC-G



MODEL(ΦD-T)

Tube(Metric)-Thread(G)		
XJSC04-G01	XJSC08-G02	XJSC12-G02
XJSC04-G02	XJSC08-G03	XJSC12-G03
XJSC06-G01	XJSC08-G04	XJSC12-G04
XJSC06-G02	XJSC10-G01	
XJSC06-G03	XJSC10-G02	
XJSC06-G04	XJSC10-G03	
XJSC08-G01	XJSC10-G04	

XPA



MODEL(ΦD)

Tube(Metric)-Tube(Inch)	
XPA 04	XPA 5/32
XPA 06	XPA 3/16
XPA 08	XPA 1/4
XPA 10	XPA 5/16
XPA 12	XPA 3/8
	XPA 1/2

Mini Fittings

Feature

- Ideal for pneumatic connections specifically for small and compact equipments.
- Aesthetically pleasing nickel-plated metallic standardized feature for all applicable compact fittings.

Specifcation

Fliud Type	Air,Vacuum
Operating Pressure	0~10.2Kgf/cm²(0~1.0Mpa)
Negative Pressure	-750mm Hg(10Torr)
Operating Temperature Range	0~60℃
Tube Material	Nylon and Polyurethane

Ordering Code

XPC | 08 | 02 | C

(1) (2) (3) (4)

(1)Model Type

(2)Tube Outer Diameter(ΦD)

Metric Tube			
Code	03	04	06
ΦD	3mm	4mm	6mm

Construction

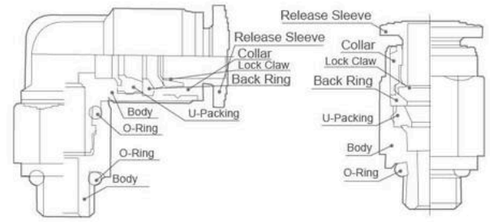

(3)Thread Type & Size

■ **Metric Size**

Metric Size			
Code	M3	M5	M6
ΦD	M3×0.5	M5×0.8	M6×1

■ **Taper Pipe Thread**

R(PT)Thread		
Code	01	G01
Size	R1/8"	G1/4"

(4)Compact Type

XPC-C



MODEL(ΦD-T)

Tube(Metric)	
XPC03-M3C	XPC04-01C
XPC03-M5C	XPC06-M5C
XPC03-M6C	XPC06-M6C
XPC04-M3C	XPC06-01C
XPC04-M5C	
XPC04-M6C	

XPB-C



MODEL(ΦD1-T)

Tube(Metric)	
XPB03-M3C	XPB04-01C
XPB03-M5C	XPB06-M5C
XPB03-M6C	XPB06-M6C
XPB04-M3C	XPB06-01C
XPB04-M5C	
XPB04-M6C	

XPCF-C



MODEL(ΦD-T)

Tube(Metric)	
XPCF03-M3C	XPCF04-01C
XPCF03-M5C	XPCF06-M5C
XPCF03-M6C	XPCF06-M6C
XPCF04-M3C	XPCF06-01C
XPCF04-M5C	
XPCF04-M6C	

XPD-C



MODEL(ΦD-T)

Tube(Metric)	
XPD03-M3C	XPD04-01C
XPD03-M5C	XPD06-M5C
XPD03-M6C	XPD06-M6C
XPD04-M3C	XPD06-01C
XPD04-M5C	
XPD04-M6C	

XPOC-C



MODEL(ΦD-T)

Tube(Metric)	
XPOC03-M3C	XPOC04-01C
XPOC03-M5C	XPOC06-M5C
XPOC03-M6C	XPOC06-M6C
XPOC04-M3C	XPOC06-01C
XPOC04-M5C	
XPOC04-M6C	

XPLL-C



MODEL(ΦD-T)

Tube(Metric)	
XPLL03-M3C	XPLL04-01C
XPLL03-M5C	XPLL06-M5C
XPLL03-M6C	XPLL06-M6C
XPLL04-M3C	XPLL06-01C
XPLL04-M5C	
XPLL04-M6C	

Mini Fittings

XPL-C



MODEL(ΦD-T)	
Tube(Metric)	
XPL03-M3C	XPL04-01C
XPL03-M5C	XPL06-M5C
XPL03-M6C	XPL06-M6C
XPL04-M3C	XPL06-01C
XPL04-M5C	
XPL04-M6C	

XPE-C



MODEL(ΦD)
Tube(Metric)
PE 03C
PE 04C
PE 06C

XPU-C



MODEL(ΦD)
Tube(Metric)
XPU03C
XPU04C
XPU06C

XPY-C



MODEL(ΦD)
Tube(Metric)
XPY 03C
XPY 04C
XPY 06C

XPUL-C



MODEL(ΦD)
Tube(Metric)
XPUL 03C
XPUL 04C
XPUL 06C

XPC-G-C



MODEL(ΦD-T)
Tube(Metric)
PC 04-G01C
PC 04-G01C

XPG-C



MODEL(ΦD1-ΦD2)
Tube(Metric)
XPG 04-03C
XPG 06-03C
XPG 06-04C

XPL-G-C



MODEL(ΦD-T)
Tube(Metric)
PL 04-G01C
PL 04-G01C

XPW-C



MODEL(ΦD1-ΦD2)
Tube(Metric)
XPW 04-03C
XPW 06-03C
XPW 06-04C

Hand Valve

Feature

- The source of pressure can completely shut off by simply turning the knob.
- Three-way directional control configuration releases the residual internal pressure on the output side when manually Closed.
- Idea for inspecting or repairing any devices without compromising the safety.
- Directionality of airflow may be selected from the tubing or threaded input side to the tubing or threaded output side.

Construction

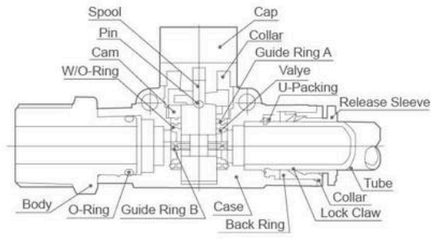

Specifcation

Fliud Type	Air,Vacuum
Operating Pressure	0~10.2Kgf/cm^2(0~1.0Mpa)
Negative Pressure	-750mm Hg(1.0Torr)
Operating Temperature Range	0~60℃
Tube Material	Nylon and Polyurethane

Ordering Code

XHVFF — 08 — 02

(1) (2) (3)

(1)Model Type

(2)Tube Outer Diameter(ΦD)

Metric Tube							
Code	04	06	08	10	12	14	16
ΦD	4mm	6mm	8mm	10mm	12mm	14mm	16mm

(3)Thread Type & Size

■ **Metric Size**

Metric Size			
Code	M5	M6	M8
ΦD	M5×0.8	M6×1	M8×1

■ **Taper Pipe Thread**

	R(PT)Thread				G(PF)Thread			
Code	01	02	03	04	G01	G02	G03	G04
Size	R1/8"	R1/4"	R3/8"	R1/2"	G1/8"	G1/4"	G3/8"	G1/2"

Hand Valve

XHVFF



MODEL(ΦD1-ΦD2)
Tube(Metric)
XHVFF 06-06
XHVFF 08-06
XHVFF 08-08
XHVFF 10-08
XHVFF 10-10
XHVFF 12-10
XHVFF 12-12

XHVSS



MODEL(T1-T2)
Thread(R)-Thread(R)
XHVSS 01-01
XHVSS 02-01
XHVSS 02-02
XHVSS 03-02
XHVSS 03-03
XHVSS 04-03
XHVSS 04-04

XHVSF



MODEL(ΦD-T)	
Tube(Metric)-Thread(R)	
XHVSF 06-01	XHVSF 10-03
XHVSF 06-02	XHVSF 10-04
XHVSF 06-03	XHVSF 12-02
XHVSF 08-01	XHVSF 12-03
XHVSF 08-02	XHVSF 12-04
XHVSF 08-03	
XHVSF 10-02	

XHVFS



MODEL(ΦD-T)	
Tube(Metric)-Thread(R)	
XHVFS 06-01	XHVFS 10-02
XHVFS 06-02	XHVFS 10-03
XHVFS 06-03	XHVFS 10-04
XHVFS 08-01	XHVFS 12-02
XHVFS 08-02	XHVFS 12-03
XHVFS 08-03	XHVFS 12-04

XHVFS-G



MODEL(ΦD-T)	
Tube(Metric)	Thread(G)
XHVFS 06-G01	XHVFS 12-G02
XHVFS 06-G02	XHVFS 12-G03
XHVFS 06-G03	XHVFS 12-G04
XHVFS 08-G01	
XHVFS 08-G02	
XHVFS 08-G03	
XHVFS 10-G02	
XHVFS 10-G03	
XHVFS 10-G04	

XPLF-G



MODEL(ΦD-T)	
Tube(Metric)	Thread(G)
XHVSF 06-G01	XHVSF 12-G02
XHVSF 06-G02	XHVSF 12-G03
XHVSF 06-G03	XHVSF 12-G04
XHVSF 08-G01	
XHVSF 08-G02	
XHVSF 08-G03	
XHVSF 10-G02	
XHVSF 10-G03	
XHVSF 10-G04	

XHVSS-G



MODEL(T1-T2)
Tube(Metric)-Thread(G)
XHVSS 01-G01(B)
XHVSS 02-G01(B)
XHVSS 02-G02(B)
XHVSS 03-G02(B)
XHVSS 03-G03(B)
XHVSS 04-G03(B)
XHVSS 04-G04(B)

Stop Fittings

Feature

- Flow of air is completely stopped upon disconnectiong the tube and reinstated upon reconnecting the tube.
- Dual-passage mechanism allows the pressure source to be originated from either side of the pneumatic connection.
- Ideal for pneumatic applications where tubing connections are frequently re-arranged.
- Suitable for experimenting,testing,demonstration,and educating various pneumatic applications.

Specifcation

Fliud Type	Air,Vacuum
Operating Pressure	0~10.2Kgf/cm^2(0~1.0Mpa)
Negative Pressure	-750mm Hg(10Torr)
Operating Temperature Range	0~60℃
Tube Material	Nylon and Polyurethane

XSPC



MODEL(ΦD-T)

Tube(Metric)	
XSPC 04-01	XSPC 10-03
XSPC 06-01	XSPC 10-04
XSPC 06-02	XSPC 12-02
XSPC 08-02	XSPC 12-03
XSPC 08-03	XSPC 12-04
XSPC 10-02	

XSPU



MODEL(ΦD)

Tube(Metric)
XSPU 04
XSPU 06
XSPU 08
XSPU 10
XSPU 12

XSPC-G



MODEL(ΦD-T)

Tube(Metric)	
XSPC 04-G01	XSPC 10-G03
XSPC 06-G01	XSPC 10-G04
XSPC 06-G02	XSPC 12-G02
XSPC 08-G02	XSPC 12-G03
XSPC 08-G03	XSPC 12-G04

Check Valves

Feature

- Unti-directionality of airflow is maintained while the flow of air in the opposite direction is completely prevented.
- Constant input and output air pressure is achieved due to the controlled directionality of airflow.
- Suitable for the pneumatic applications under low operational pressure conditions.

Specifcation

Fliud Type	Air,Vacuum
Operating Pressure	0~10.2Kgf/cm^2(0~1.0Mpa)
Negative Pressure	-750mm Hg(10Torr)
Operating Temperature Range	0~60℃
Tube Material	Nylon and Polyurethane

XCVPC



MODEL(ΦD-T)

Tube(Metric)	
XCVPC 04-M5	XCVPC 08-02
XCVPC 04-M6	XCVPC 10-02
XCVPC 04-01	XCVPC 10-03
XCVPC 06-01	XCVPC 10-04
XCVPC 06-02	XCVPC 12-03
XCVPC 08-01	XCVPC 12-04

XCVPU



MODEL(ΦD)

Tube(Metric)
XCVPU 04
XCVPU 06
XCVPU 08
XCVPU 10
XCVPU12

XCVPF



MODEL(T1-T2)

Tube(Metric)
XCVPF 01-01
XCVPF 02-02
XCVPF 03-03
XCVPF 04-04

XCVPC-G



MODEL(ΦD-T)

Tube(Metric)	
XCVPV 04-G01	XCVPV 10-G04
XCVPV 06-G01	XCVPV 12-G03
XCVPV 06-G02	XCVPV 12-G04
XCVPV 08-G01	
XCVPV 08-G02	
XCVPV 10-G03	

Metal Push-In Fittings

XMPC



Male Stud

MODEL(ΦD-T)

Tube(Metric)-Thread(R)			Tube(Inch)-Thread(R)			Tube(Inch)-Thread(NPT)		
XMPC03-M3	XMPC06-01	XMPC10-04	XMPC1/8-01	XMPC1/4-03	XMPC1/2-02	XMPC1/8-U10	XMPC3/16-N03	XMPC3/8-N01
XMPC03-M5	XMPC06-02	XMPC12-02	XMPC1/8-02	XMPC5/16-01	XMPC1/2-03	XMPC1/8-N01	XMPC1/4-U10	XMPC3/8-N02
XMPC04-M5	XMPC08-01	XMPC12-03	XMPC5/32-01	XMPC5/16-02	XMPC1/2-04	XMPC1/8-N02	XMPC1/4-N01	XMPC3/8-N03
XMPC04-01	XMPC08-02	XMPC12-04	XMPC5/32-02	XMPC5/16-03		XMPC5/32-U10	XMPC1/4-N02	XMPC3/8-N04
XMPC04-02	XMPC08-03	XMPC14-03	XMPC3/16-01	XMPC5/16-04		XMPC5/32-N01	XMPC1/4-N03	XMPC1/2-N02
XMPC05-M5	XMPC08-04	XMPC14-04	XMPC3/16-02	XMPC3/8-01		XMPC5/32-N02	XMPC5/16-N01	XMPC1/2-N03
XMPC05-01	XMPC10-01	XMPC16-03	XMPC3/16-03	XMPC3/8-02		XMPC3/16-U10	XMPC5/16-N02	XMPC1/2-N04
XMPC05-02	XMPC10-02	XMPC16-04	XMPC1/4-01	XMPC3/8-03		XMPC3/16-N01	XMPC5/16-N03	
XMPC06-M5	XMPC10-03		XMPC1/4-02	XMPC3/8-04		XMPC3/16-N02	XMPC5/16-N04	

XMPOC



Round Male Stud

MODEL(ΦD-T)

Tube(Metric)-Thread(R)			Tube(Inch)-Thread(R)			Tube(Inch)-Thread(NPT)		
XMPOC03-M3	XMPOC06-01	XMPOC10-04	XMPOC1/8-01	XMPOC1/4-03	XMPOC1/2-02	XMPOC1/8-U10	XMPOC3/16-N03	XMPOC3/8-N01
XMPOC03-M5	XMPOC06-02	XMPOC12-02	XMPOC1/8-02	XMPOC5/16-01	XMPOC1/2-03	XMPOC1/8-N01	XMPOC1/4-U10	XMPOC3/8-N02
XMPOC04-M5	XMPOC08-01	XMPOC12-03	XMPOC5/32-01	XMPOC5/16-02	XMPOC1/2-04	XMPOC1/8-N02	XMPOC1/4-N01	XMPOC3/8-N03
XMPOC04-01	XMPOC08-02	XMPOC12-04	XMPOC5/32-02	XMPOC5/16-03		XMPOC5/32-U10	XMPOC1/4-N02	XMPOC3/8-N04
XMPOC04-02	XMPOC08-03	XMPOC14-03	XMPOC3/16-01	XMPOC5/16-04		XMPOC5/32-N01	XMPOC1/4-N03	XMPOC1/2-N02
XMPOC05-M5	XMPOC08-04	XMPOC14-04	XMPOC3/16-02	XMPOC3/8-01		XMPOC5/32-N02	XMPOC5/16-N01	XMPOC1/2-N03
XMPOC05-01	XMPOC10-01	XMPOC16-03	XMPOC3/16-03	XMPOC3/8-02		XMPOC3/16-U10	XMPOC5/16-N02	XMPOC1/2-N04
XMPOC05-02	XMPOC10-02	XMPOC16-04	XMPOC1/4-01	XMPOC3/8-03		XMPOC3/16-N01	XMPOC5/16-N03	
XMPOC06-M5	XMPOC10-03		XMPOC1/4-02	XMPOC3/8-04		XMPOC3/16-N02	XMPOC5/16-N04	

XMPCF



Female Stud

MODEL(ΦD-T)

Tube(Metric)-Thread(R)			Tube(Inch)-Thread(R)			Tube(Inch)-Thread(NPT)		
XMPCF04-01	XMPCF08-04	XMPCF14-03	XMPCF1/8-01	XMPCF1/4-03	XMPCF1/2-02	XMPCF1/8-N01	XMPCF1/4-N03	XMPCF3/8-N04
XMPCF04-01	XMPCF10-01	XMPCF14-04	XMPCF1/8-02	XMPCF5/16-01	XMPCF1/2-03	XMPCF1/8-N02	XMPCF1/4-U10	XMPCF1/2-N02
XMPCF04-01	XMPCF10-03	XMPCF16-04	XMPCF5/32-02	XMPCF5/16-03		XMPCF5/32-N02	XMPCF5/16-N02	XMPCF1/2-N04
XMPCF04-01	XMPCF10-04		XMPCF3/16-01	XMPCF5/16-04		XMPCF3/16-N01	XMPCF5/16-N03	
XMPCF04-01	XMPCF12-01		XMPCF3/16-02	XMPCF3/8-01		XMPCF3/16-N02	XMPCF5/16-N04	
XMPCF04-01	XMPCF12-02		XMPCF3/16-03	XMPCF3/8-02		XMPCF3/16-N03	XMPCF3/8-N01	
XMPCF04-01	XMPCF12-03		XMPCF1/4-01	XMPCF3/8-03		XMPCF1/4-N01	XMPCF3/8-N02	
XMPCF04-01	XMPCF12-04		XMPCF1/4-02	XMPCF3/8-04		XMPCF1/4-N02	XMPCF3/8-N03	

XMPL



Male Stud Swlve Elbow

MODEL(ΦD-T)

Tube(Metric)-Thread(R)			Tube(Inch)-Thread(R)			Tube(Inch)-Thread(NPT)		
XMPL03-M3	XMPL06-01	XMPL10-04	XMPL1/8-01	XMPL1/4-03	XMPL1/2-02	XMPL1/8-U10	XMPL3/16-N03	XMPL3/8-N01
XMPL03-M5	XMPL06-02	XMPL12-02	XMPL1/8-02	XMPL5/16-01	XMPL1/2-03	XMPL1/8-N01	XMPL1/4-U10	XMPL3/8-N02
XMPL04-M5	XMPL08-01	XMPL12-03	XMPL5/32-01	XMPL5/16-02	XMPL1/2-04	XMPL1/8-N02	XMPL1/4-N01	XMPL3/8-N03
XMPL04-01	XMPL08-02	XMPL12-04	XMPL5/32-02	XMPL5/16-03		XMPL5/32-U10	XMPL1/4-N02	XMPL3/8-N04
XMPL04-02	XMPL08-03	XMPL14-03	XMPL3/16-01	XMPL5/16-04		XMPL5/32-N01	XMPL1/4-N03	XMPL1/2-N02
XMPL05-M5	XMPL08-04	XMPL14-04	XMPL3/16-02	XMPL3/8-01		XMPL5/32-N02	XMPL5/16-N01	XMPL1/2-N03
XMPL05-01	XMPL10-01	XMPL16-03	XMPL3/16-03	XMPL3/8-02		XMPL3/16-U10	XMPL5/16-N02	XMPL1/2-N04
XMPL05-02	XMPL10-02	XMPL16-04	XMPL1/4-01	XMPL3/8-03		XMPL3/16-N01	XMPL5/16-N03	
XMPL06-M5	XMPL10-03		XMPL1/4-02	XMPL3/8-04		XMPL3/16-N02	XMPL5/16-N04	

XMPLN



Male Stud Elbow

MODEL(ΦD-T)

Tube(Metric)-Thread(R)			Tube(Inch)-Thread(R)			Tube(Inch)-Thread(NPT)		
XMPLN03-M3	XMPLN06-01	XMPLN10-04	XMPLN1/8-01	XMPLN1/4-03	XMPLN1/2-02	XMPLN1/8-U10	XMPLN3/16-N03	XMPLN3/8-N01
XMPLN03-M5	XMPLN06-02	XMPLN12-02	XMPLN1/8-02	XMPLN5/16-01	XMPLN1/2-03	XMPLN1/8-N01	XMPLN1/4-U10	XMPLN3/8-N02
XMPLN04-M5	XMPLN08-01	XMPLN12-03	XMPLN5/32-01	XMPLN5/16-02	XMPLN1/2-04	XMPLN1/8-N02	XMPLN1/4-N01	XMPLN3/8-N03
XMPLN04-01	XMPLN08-02	XMPLN12-04	XMPLN5/32-02	XMPLN5/16-03		XMPLN5/32-U10	XMPLN1/4-N02	XMPLN3/8-N04
XMPLN04-02	XMPLN08-03	XMPLN14-03	XMPLN3/16-01	XMPLN5/16-04		XMPLN5/32-N01	XMPLN1/4-N03	XMPLN1/2-N02
XMPLN05-M5	XMPLN08-04	XMPLN14-04	XMPLN3/16-02	XMPLN3/8-01		XMPLN5/32-N02	XMPLN5/16-N01	XMPLN1/2-N03
XMPLN05-01	XMPLN10-01	XMPLN16-03	XMPLN3/16-03	XMPLN3/8-02		XMPLN3/16-U10	XMPLN5/16-N02	XMPLN1/2-N04
XMPLN05-02	XMPLN10-02	XMPLN16-04	XMPLN1/4-01	XMPLN3/8-03		XMPLN3/16-N01	XMPLN5/16-N03	
XMPLN06-M5	XMPLN10-03		XMPLN1/4-02	XMPLN3/8-04		XMPLN3/16-N02	XMPLN5/16-N04	

Metal Push-In Fittings

XMPLL

MODEL(ΦD-T)

Tube(Metric)-Thread(R)			Tube(Inch)-Thread(R)			Tube(Inch)-Thread(NPT)		
MPLL04-M5	XMPLL08-01	XMPLL12-02	XMPLL1/8-01	XMPLL1/4-03	XMPLL1/2-02	XMPLL1/8-U10	XMPLL3/1 6-N03	XMPLL3/8-N01
MPLL04-01	XMPLL08-02	XMPLL12-03	XMPLL1/8-02	XMPLL5/16-01	XMPLL1/2-03	XMPLL1/8-N01	XMPLL1/4-U10	XMPLL3/8-N02
MPLL04-02	XMPLL08-03	XMPLL12-04	XMPLL5/32-01	XMPLL5/16-02	XMPLL1/2-04	XMPLL1/8-N02	XMPLL1/4-N01	XMPLL3/8-N03
MPLL05-M5	XMPLL 08-04	XMPLL14-03	XMPLL5/32-02	XMPLL5/16-03		XMPLL5/32-U10	XMPLL1/4-N02	XMPLL3/8-N04
MPLL05-01	XMPLL10-01	XMPLL14-04	XMPLL3/16-01	XMPLL5/16-04		XMPLL5/32-N01	XMPLL1/4-N03	XMPLL1/2-N02
MPLL05-02	XMPLL10-02	XMPLL16-03	XMPLL3/16-02	XMPLL3/8-01		XMPLL5/32-N02	XMPLL5/16-N01	XMPLL1/2-N03
MPLL06-M5	XMPLL10-03	XMPLL16-04	XMPLL3/16-03	XMPLL3/8-02		XMPLL3/16-U10	XMPLL5/16-N02	XMPLL1/2-N04
MPLL06-01	XMPLL10-04		XMPLL1/4-01	XMPLL3/8-03		XMPLL3/1 6-N01	XMPLL5/16-N03	
MPLL06-02	XMPLL12-01		XMPLL1/4-02	XMPLL3/8-04		XMPLL3/1 6-N02	XMPLL5/16-N04	



Extended Male Elbow

XMPLF

MODEL(ΦD-T)

Tube(Metric)-Thread(R)			Tube(Inch)-Thread(R)			Tube(Inch)-Thread(NPT)		
XMPLF04-01	XMPLF08-04	XMPLF14-03	XMPLF1/8-01	XMPLF1/4-03	XMPLF1/2-02	XMPLF1/8-N01	XMPLF1/4-N03	XMPLF3/8-N04
XMPLF04-02	XMPLF10-01	XMPLF14-04	XMPLF1/8-02	XMPLF5/16-01	XMPLF1/2-03	XMPLF1/8-N02	XMPLF1/4-U10	XMPLF1/2-N02
XMPLF05-01	XMPLF10-02	XMPLF16-03	XMPLF5/32-01	XMPLF5/16-02	XMPLF1/2-04	XMPLF5/32-N01	XMPLF5/16-N01	XMPLF1/2-N03
XMPLF05-02	XMPLF10-03	XMPLF16-04	XMPLF5/32-02	XMPLF5/16-03		XMPLF5/32-N02	XMPLF5/1 6-N02	XMPLF1/2-N04
XMPLF06-01	XMPLF10-04		XMPLF3/16-01	XMPLF5/16-04		XMPLF3/1 6-N01	XMPLF5/1 6-N03	
XMPLF06-02	XMPLF12-01		XMPLF3/16-02	XMPLF3/8-01		XMPLF3/1 6-N02	XMPLF5/1 6-N04	
XMPLF08-01	XMPLF12-02		XMPLF3/16-03	XMPLF3/8-02		XMPLF3/1 6-N03	XMPLF3/8-N01	
XMPLF08-02	XMPLF12-03		XMPLF1/4-01	XMPLF3/8-03		XMPLF1/4-N01	XMPLF3/8-N02	
XMPLF08-03	XMPLF12-04		XMPLF1/4-02	XMPLF3/8-04		XMPLF1/4-N02	XMPLF3/8-N03	



Female Stud Elbow

XMPT

MODEL(ΦD-T)

Tube(Metric)-Thread(R)			Tube(Inch)-Thread(R)			Tube(Inch)-Thread(NPT)		
XMPT04-M5	XMPT08-01	XMPT12-02	XMPT1/8-01	XMPT1/4-03	XMPT1/2-02	XMPT1/8-U10	XMPT3/1 6-N03	XMPT3/8-N01
XMPT04-01	XMPT08-02	XMPT12-02	XMPT1/8-02	XMPT5/16-01	XMPT1/2-03	XMPT1/8-N01	XMPT1/4-U10	XMPT3/8-N02
XMPT04-02	XMPT08-03	XMPT12-04	XMPT5/32-01	XMPT5/16-02	XMPT1/2-04	XMPT1/8-N02	XMPT1/4-N01	XMPT3/8-N03
XMPT05-M5	XMPT 08-04	XMPT14-03	XMPT5/32-02	XMPT5/16-03		XMPT5/32-U10	XMPT1/4-N02	XMPT3/8-N04
XMPT05-01	XMPT10-01	XMPT14-04	XMPT3/16-01	XMPT5/16-04		XMPT5/32-N01	XMPT1/4-N03	XMPT1/2-N02
XMPT05-02	XMPT10-02	XMPT16-03	XMPT3/16-02	XMPT3/8-01		XMPT5/32-N02	XMPT5/16-N01	XMPT1/2-N03
XMPT06-M5	XMPT10-03	XMPT16-04	XMPT3/16-03	XMPT3/8-02		XMPT3/16-U10	XMPT5/16-N02	XMPT1/2-N04
XMPT06-01	XMPT10-04		XMPT1/4-01	XMPT3/8-03		XMPT3/1 6-N01	XMPT5/16-N03	
XMPT06-02	XMPT12-01		XMPT1/4-02	XMPT3/8-04		XMPT3/1 6-N02	XMPT5/16-N04	



Male Stud Branch Tee

XMPD

MODEL(ΦD-T)

Tube(Metric)-Thread(R)			Tube(Inch)-Thread(R)			Tube(Inch)-Thread(NPT)		
XMPD04-M5	XMPD08-01	XMPD12-02	XMPD1/8-01	XMPD1/4-03	XMPD1/2-02	XMPD1/8-U10	XMPD3/1 6-N03	XMPD3/8-N01
XMPD04-01	XMPD08-02	XMPD12-03	XMPD1/8-02	XMPD5/16-01	XMPD1/2-03	XMPD1/8-N01	XMPD1/4-U10	XMPD3/8-N02
XMPD04-02	XMPD08-03	XMPD12-04	XMPD5/32-01	XMPD5/16-02	XMPD1/2-04	XMPD1/8-N02	XMPD1/4-N01	XMPD3/8-N03
XMPD05-M5	XMPD 08-04	XMPD14-03	XMPD5/32-02	XMPD5/16-03		MPD5/32-U10	XMPD1/4-N02	XMPD3/8-N04
XMPD05-01	XMPD10-01	XMPD14-04	XMPD3/16-01	XMPD5/16-04		MPD5/32-N01	XMPD1/4-N03	XMPD1/2-N02
XMPD05-02	XMPD10-02	XMPD16-03	XMPD3/16-02	XMPD3/8-01		MPD5/32-N02	XMPD5/16-N01	XMPD1/2-N03
XMPD06-M5	XMPD10-03	XMPD16-04	XMPD3/16-03	XMPD3/8-02		MPD3/16-U10	XMPD5/16-N02	XMPD1/2-N04
XMPD06-01	XMPD10-04		XMPD1/4-01	XMPD3/8-03		XMPD3/1 6-N01	XMPD5/16-N03	
XMPD06-02	XMPD12-01		XMPD1/4-02	XMPD3/8-04		XMPD3/1 6-N02	XMPD5/16-N04	



Male Run Tee

XMPX

MODEL(ΦD-T)

Tube(Metric)-Thread(R)			Tube(Inch)-Thread(R)			Tube(Inch)-Thread(NPT)		
XMPX04-M5	XMPX08-01	XMPX12-02	XMPX1/8-01	XMPX1/4-03	XMPX1/2-02	MPX1/8-U10	XMPX3/1 6-N03	XMPX3/8-N01
XMPX04-01	XMPX08-02	XMPX12-03	XMPX1/8-02	XMPX5/16-01	XMPX1/2-03	MPX1/8-N01	XMPX1/4-U10	XMPX3/8-N02
XMPX04-02	XMPX08-03	XMPX12-04	XMPX5/32-01	XMPX5/16-02	XMPX1/2-04	MPX1/8-N02	XMPX1/4-N01	XMPX3/8-N03
XMPX05-M5	XMPX 08-04	XMPX14-03	XMPX5/32-02	XMPX5/16-03		XMPX5/32-U10	XMPX1/4-N02	XMPX3/8-N04
XMPX05-01	XMPX10-01	XMPX14-04	XMPX3/16-01	XMPX5/16-04		XMPX5/32-N01	XMPX1/4-N03	XMPX1/2-N02
XMPX05-02	XMPX10-02	XMPX16-03	XMPX3/16-02	XMPX3/8-01		XMPX5/32-N02	XMPX5/16-N01	XMPX1/2-N03
XMPX06-M5	XMPX10-03	XMPX16-04	XMPX3/16-03	XMPX3/8-02		XMPX3/16-U10	XMPX5/16-N02	XMPX1/2-N04
XMPX06-01	XMPX10-04		XMPX1/4-01	XMPX3/8-03		XMPX3/1 6-N01	XMPX5/16-N03	
XMPX06-02	XMPX12-01		XMPX1/4-02	XMPX3/8-04		XMPX3/1 6-N02	XMPX5/16-N04	



Male Y

Metal Push-In Fittings

XMPMF

MODEL(ΦD-T)

Tube(Metric)-Thread(R)			Tube(Inch)-Thread(R)			Tube(Inch)-Thread(NPT)		
XMPMF04-01	XMPMF08-04	XMPMF14-03	XMPMF1/8-01	XMPMF1/4-03	XMPMF1/2-02	XMPMF1/8-N01	XMPMF1/4-N03	XMPMF3/8-N04
XMPMF04-02	XMPMF10-01	XMPMF14-04	XMPMF1/8-02	XMPMF5/16-01	XMPMF1/2-03	XMPMF1/8-N02	XMPMF1/4-U10	XMPMF1/2-N02
XMPMF05-01	XMPMF10-02	XMPMF16-03	XMPMF5/32-01	XMPMF5/16-02	XMPMF1/2-04	XMPMF5/32-N01	XMPMF5/16-N0	XMPMF1/2-N03
XMPMF05-02	XMPMF10-03	XMPMF16-04	XMPMF5/32-02	XMPMF5/16-03		XMPMF5/32-N02	XMPMF5/1 6-N02	XMPMF1/2-N04
XMPMF06-01	XMPMF10-04		XMPMF3/16-01	XMPMF5/16-04		XMPMF3/1 6-N01	XMPMF5/1 6-N03	
XMPMF06-02	XMPMF12-01		XMPMF3/16-02	XMPMF3/8-01		XMPMF3/1 6-N02	XMPMF5/1 6-N04	
XMPMF08-01	XMPMF12-02		XMPMF3/16-03	XMPMF3/8-02		XMPMF3/1 6-N03	XMPMF3/8-N01	
XMPMF08-02	XMPMF12-03		XMPMF1/4-01	XMPMF3/8-03		XMPMF1/4-N01	XMPMF3/8-N02	
XMPMF08-03	XMPMF12-04		XMPMF1/4-02	XMPMF3/8-04		XMPMF1/4-N02	XMPMF3/8-N03	



Bulkhead Straight

XMPH

MODEL(ΦD-T)

Tube(Metric)-Thread(R)			Tube(Inch)-Thread(R)			Tube(Inch)-Thread(NPT)		
XMPH04-M5	XMPH08-01	XMPH12-02	XMPH1/8-01	XMPH1/4-03	XMPH1/2-02	XMPH1/8-U10	XMPH3/16-N03	XMPH3/8-N01
XMPH04-01	XMPH08-02	XMPH12-03	XMPH1/8-02	XMPH5/16-01	XMPH1/2-03	XMPH1/8-N01	XMPH1/4-U10	XMPH3/8-N02
XMPH04-02	XMPH08-03	XMPH12-04	XMPH5/32-01	XMPH5/16-02	XMPH1/2-04	XMPH1/8-N02	XMPH1/4-N01	XMPH3/8-N03
XMPH05-M5	XMPH08-04	XMPH14-03	XMPH5/32-02	XMPH5/16-03		XMPH5/32-U10	XMPH1/4-N02	XMPH3/8-N04
XMPH05-01	XMPH10-01	XMPH14-04	XMPH3/16-01	XMPH5/16-04		XMPH5/32-N01	XMPH1/4-N03	XMPH1/2-N02
XMPH05-02	XMPH10-02	XMPH16-03	XMPH3/16-02	XMPH3/8-01		XMPH5/32-N02	XMPH5/16-N01	XMPH1/2-N03
XMPH06-M5	XMPH10-03	XMPH16-04	XMPH3/16-03	XMPH3/8-02		XMPH3/16-U10	XMPH5/16-N02	XMPH1/2-N04
XMPH06-01	XMPH10-04		XMPH1/4-01	XMPH3/8-03		XMPH3/16-N01	XMPH5/16-N03	
XMPH06-02	XMPH12-01		XMPH1/4-02	XMPH3/8-04		XMPH3/16-N02	XMPH5/16-N04	



Single Male Banjo

XMPUC

MODEL(ΦD)

Tube(Metric)	Tube(Inch)
XMPUC 03	XMPUC 1/8
XMPUC 04	XMPUC 5/32
XMPUC 05	XMPUC 3/16
XMPUC 06	XMPUC 1/4
XMPUC 08	XMPUC 5/16
XMPUC 10	XMPUC 3/8
XMPUC 12	XMPUC 1/2
XMPUC 14	
XMPUC 16	



Union Straight

XMPUL

MODEL(ΦD)

Tube(Metric)	Tube(Inch)
XMPUL 03	XMPUL 1/8
XMPUL 04	XMPUL 5/32
XMPUL 05	XMPUL 3/16
XMPUL 06	XMPUL 1/4
XMPUL 08	XMPUL 5/16
XMPUL 10	XMPUL 3/8
XMPUL 12	XMPUL 1/2
XMPUL 14	
XMPUL 16	



Union Elbow

XMPUT

MODEL(ΦD)

Tube(Metric)	Tube(Inch)
XMPUT 03	XMPUT 1/8
XMPUT 04	XMPUT 5/32
XMPUT 05	XMPUT 3/16
XMPUT 06	XMPUT 1/4
XMPUT 08	XMPUT 5/16
XMPUT 10	XMPUT 3/8
XMPUT 12	XMPUT 1/2
XMPUT 14	
XMPUT 16	



Union Tee

XMPY

MODEL(ΦD)

Tube(Metric)	Tube(Inch)
XMPY 03	XMPY 1/8
XMPY 04	XMPY 5/32
XMPY 05	XMPY 3/16
XMPY 06	XMPY 1/4
XMPY 08	XMPY 5/16
XMPY 10	XMPY 3/8
XMPY 12	XMPY 1/2
XMPY 14	
XMPY 16	



Union Y

XMPM

MODEL(ΦD)

Tube(Metric)	Tube(Inch)
XMPM 03	XMPM 1/8
XMPM 04	XMPM 5/32
XMPM 05	XMPM 3/16
XMPM 06	XMPM 1/4
XMPM 08	XMPM 5/16
XMPM 10	XMPM 3/8
XMPM 12	XMPM 1/2
XMPM 14	
XMPM 16	



Bulkhead Union

Metal Push-In Fittings

XMPG



Union Reducer

MODEL(ΦD1-ΦD2)	
Tube(Metric)	Tube(Inch)
XMPG 06-04	XMPG 1/4-5/32
XMPG 08-04	XMPG 1/4-1/8
XMPG 08-06	XMPG 3/16-5/32
XMPG 10-06	XMPG 5/16-1/4
XMPG 10-08	XMPG 3/8-1/4
XMPG 12-08	XMPG 3/8-5/16
XMPG 12-10	XMPG 1/2-3/8
XMPG 14-10	
XMPG 14-12	
XMPG 16-12	

XMPTG



Union Tee Reducer

MODEL(ΦD1-ΦD2)	
Tube(Metric)	Tube(Inch)
XMPTG 06-04	XMPTG 1/4-5/32
XMPTG 08-04	XMPTG 1/4-1/8
XMPTG 08-06	XMPTG 3/16-5/32
XMPTG 10-06	XMPTG 5/16-1/4
XMPTG 10-08	XMPTG 3/8-1/4
XMPTG 12-08	XMPTG 3/8-5/16
XMPTG 12-10	XMPTG 1/2-3/8
XMPTG 14-10	
XMPTG 14-12	
XMPTG 16-12	

XMPGJ



Plug-In Reducer

MODEL(ΦD1-ΦD2)	
Tube(Metric)	Tube(Inch)
XMPGJ 06-04	XMPGJ 1/4-5/32
XMPGJ 08-04	XMPGJ 5/16-5/32
XMPGJ 08-06	XMPGJ 5/16-1/4
XMPGJ 10-06	XMPGJ 3/8-1/4
XMPGJ 10-08	XMPGJ 3/8-5/16
XMPGJ 12-06	XMPGJ 1/2-1/4
XMPGJ 12-08	
XMPGJ 12-10	

XMPLJ



Plug-In Elbow

MODEL(ΦD)	
Tube(Metric)	Tube(Inch)
XMPLJ 04	XMPLJ 1/8
XMPLJ 05	XMPLJ 5/32
XMPLJ 06	XMPLJ 3/16
XMPLJ 08	XMPLJ 1/4
XMPLJ 10	XMPLJ 5/16
XMPLJ 12	XMPLJ 3/8
XMPLJ 14	XMPLJ 1/2
XMPLJ 16	

Matel Push-InFittings With G Thread(O-Ring)

XMPC-G



Male Stud

MODEL(ΦD-T)	
Tube(Metric)-Thread(G)	
XMPC03-G01	XMPC10-G02
XMPC04-G01	XMPC10-G03
XMPC04-G02	XMPC10-G04
XMPC05-G01	XMPC12-G01
XMPC05-G02	XMPC12-G02
XMPC06-G01	XMPC12-G03
XMPC06-G02	XMPC12-G04
XMPC08-G01	XMPC14-G03
XMPC08-G02	XMPC14-G04
XMPC08-G03	XMPC16-G03
XMPC08-G04	XMPC16-G04
XMPC10-G01	

XMPOC-G



Round Male Stud

MODEL(ΦD-T)	
Tube(Metric)-Thread(G)	
XMPOC03-G01	XMPOC10-G02
XMPOC04-G01	XMPOC10-G03
XMPOC04-G02	XMPOC10-G04
XMPOC05-G01	XMPOC12-G01
XMPOC05-G02	XMPOC12-G02
XMPOC06-G01	XMPOC12-G03
XMPOC06-G02	XMPOC12-G04
XMPOC08-G01	XMPOC14-G03
XMPOC08-G02	XMPOC14-G04
XMPOC08-G03	XMPOC16-G03
XMPOC08-G04	XMPOC16-G04
XMPOC10-G01	

XMPL-G



Male Stud Elbow

MODEL(ΦD-T)	
Tube(Metric)-Thread(G)	
XMPL03-G01	XMPL10-G02
XMPL04-G01	XMPL10-G03
XMPL04-G02	XMPL10-G04
XMPL05-G01	XMPL12-G01
XMPL05-G02	XMPL12-G02
XMPL06-G01	XMPL12-G03
XMPL06-G02	XMPL12-G04
XMPL08-G01	XMPL14-G03
XMPL08-G02	XMPL14-G04
XMPL08-G03	XMPL16-G03
XMPL08-G04	XMPL16-G04
XMPL10-G01	

XMPLL-G



Extended Male Elbow

MODEL(ΦD-T)	
Tube(Metric)-Thread(G)	
XMPLL04-G01	XMPLL10-G02
XMPLL04-G02	XMPLL10-G03
XMPLL05-G01	XMPLL10-G04
XMPLL05-G02	XMPLL12-G01
XMPLL06-G01	XMPLL12-G02
XMPLL06-G02	XMPLL12-G03
XMPLL08-G01	XMPLL12-G04
XMPLL08-G02	XMPLL14-G03
XMPLL08-G03	XMPLL14-G04
XMPLL08-G04	XMPLL16-G03
XMPLL10-G01	XMPLL16-G04

Matel Push-InFittings With G Thread(O-Ring)

XMPT-G



Male Stud Branch Tee

MODEL(ΦD-T)	
Tube(Metric)-Thread(G)	
XMPT04-G01	XMPT10-G02
XMPT04-G02	XMPT10-G03
XMPT05-G01	XMPT10-G04
XMPT05-G02	XMPT12-G01
XMPT06-G01	XMPT12-G02
XMPT06-G02	XMPT12-G03
XMPT08-G01	XMPT12-G04
XMPT08-G02	XMPT14-G03
XMPT08-G03	XMPT14-G04
XMPT08-G04	XMPT16-G03
XMPT10-G01	XMPT16-G04

XMPD-G



Male Run Tee

MODEL(ΦD-T)	
Tube(Metric)-Thread(G)	
XMPD04-G01	XMPD10-G02
XMPD04-G02	XMPD10-G03
XMPD05-G01	XMPD10-G04
XMPD05-G02	XMPD12-G01
XMPD06-G01	XMPD12-G02
XMPD06-G02	XMPD12-G03
XMPD08-G01	XMPD12-G04
XMPD08-G02	XMPD14-G03
XMPD08-G03	XMPD14-G04
XMPD08-G04	XMPD16-G03
XMPD10-G01	XMPD16-G04

XMPH-G



Single Male Banjo

MODEL(ΦD-T)	
Tube(Metric)-Thread(G)	
XMPH04-G01	XMPH10-G02
XMPH04-G02	XMPH10-G03
XMPH05-G01	XMPH10-G04
XMPH05-G02	XMPH12-G01
XMPH06-G01	XMPH12-G02
XMPH06-G02	XMPH12-G03
XMPH08-G01	XMPH12-G04
XMPH08-G02	XMPH14-G03
XMPH08-G03	XMPH14-G04
XMPH08-G04	XMPH16-G03
XMPH10-G01	XMPH16-G04

Stainless Steel Push-In Fittings

XMPCS



Male Stud

MODEL(ΦD-T)	
Tube(Metric)-Thread(R)	
XMPCS04-M5	XMPCS10-02
XMPCS04-01	XMPCS10-03
XMPCS04-02	XMPCS10-04
XMPCS06-M5	XMPCS12-01
XMPCS06-01	XMPCS12-02
XMPCS06-02	XMPCS12-03
XMPCS06-03	XMPCS12-04
XMPCS06-04	XMPCS14-02
XMPCS08-01	XMPCS14-03
XMPCS08-02	XMPCS14-04
XMPCS08-03	XMPCS16-02
XMPCS08-04	XMPCS16-03
XMPCS10-01	XMPCS16-04

XMPLS



Male Stud Elbow

MODEL(ΦD-T)	
Tube(Metric)-Thread(R)	
XMPLS04-M5	XMPLS10-02
XMPLS04-01	XMPLS10-03
XMPLS04-02	XMPLS10-04
XMPLS06-M5	XMPLS12-01
XMPLS06-01	XMPLS12-02
XMPLS06-02	XMPLS12-03
XMPLS06-03	XMPLS12-04
XMPLS06-04	XMPLS14-02
XMPLS08-01	XMPLS14-03
XMPLS08-02	XMPLS14-04
XMPLS08-03	XMPLS16-02
XMPLS08-04	XMPLS16-03
XMPLS10-01	XMPLS16-04

XMPCFS



Single Male Banjo

MODEL(ΦD-T)	
Tube(Metric)-Thread(R)	
XMPCFS04-M5	XMPCFS10-02
XMPCFS04-01	XMPCFS10-03
XMPCFS04-02	XMPCFS10-04
XMPCFS06-M5	XMPCFS12-01
XMPCFS06-01	XMPCFS12-02
XMPCFS06-02	XMPCFS12-03
XMPCFS06-03	XMPCFS12-04
XMPCFS06-04	XMPCFS14-02
XMPCFS08-01	XMPCFS14-03
XMPCFS08-02	XMPCFS14-04
XMPCFS08-03	XMPCFS16-02
XMPCFS08-04	XMPCFS16-03
XMPCFS10-01	XMPCFS16-04

XMPTS



Male Stud Branch Tee

MODEL(ΦD-T)	
Tube(Metric)-Thread(R)	
XMPTS04-M5	XMPTS10-02
XMPTS04-01	XMPTS10-03
XMPTS04-02	XMPTS10-04
XMPTS06-M5	XMPTS12-01
XMPTS06-01	XMPTS12-02
XMPTS06-02	XMPTS12-03
XMPTS06-03	XMPTS12-04
XMPTS06-04	XMPTS14-02
XMPTS08-01	XMPTS14-03
XMPTS08-02	XMPTS14-04
XMPTS08-03	XMPTS16-02
XMPTS08-04	XMPTS16-03
XMPTS10-01	XMPTS16-04

Stainless Steel Push-In Fittings

XMPDS



Male Run Tee

MODEL(ΦD-T) Tube(Metric)-Thread(R)	
XMPDS04-M5	XMPDS10-02
XMPDS04-01	XMPDS10-03
XMPDS04-02	XMPDS10-04
XMPDS06-M5	XMPDS12-01
XMPDS06-01	XMPDS12-02
XMPDS06-02	XMPDS12-03
XMPDS06-03	XMPDS12-04
XMPDS06-04	XMPDS14-02
XMPDS08-01	XMPDS14-03
XMPDS08-02	XMPDS14-04
XMPDS08-03	XMPDS16-02
XMPDS08-04	XMPDS16-03
XMPDS10-01	XMPDS16-04

XMPMFS



Female Stud

MODEL(ΦD-T) Tube(Metric)-Thread(R)	
XMPMFS04-M5	XMPMFS10-02
XMPMFS04-01	XMPMFS10-03
XMPMFS04-02	XMPMFS10-04
XMPMFS06-M5	XMPMFS12-01
XMPMFS06-01	XMPMFS12-02
XMPMFS06-02	XMPMFS12-03
XMPMFS06-03	XMPMFS12-04
XMPMFS06-04	XMPMFS14-02
XMPMFS08-01	XMPMFS14-03
XMPMFS08-02	XMPMFS14-04
XMPMFS08-03	XMPMFS16-02
XMPMFS08-04	XMPMFS16-03
XMPMFS10-01	XMPMFS16-04

XMNSES



Elbow(g thread)

MODEL(ΦD-T) Tube(Metric)-Thread(R)	
XMNSES04-M5	XMNSES08-03
XMNSES04-01	XMNSES08-04
XMNSES04-02	XMNSES10-01
XMNSES06-M5	XMNSES10-02
XMNSES06-01	XMNSES10-03
XMNSES06-02	XMNSES10-04
XMNSES06-03	XMNSES12-01
XMNSES06-04	XMNSES12-02
XMNSES08-01	XMNSES12-03
XMNSES08-02	XMNSES12-04

XMPHS



Single Male Banjo

MODEL(ΦD-T) Tube(Metric)-Thread(R)	
XMPHS04-M5	XMPHS08-03
XMPHS04-01	XMPHS08-04
XMPHS04-02	XMPHS10-01
XMPHS06-M5	XMPHS10-02
XMPHS06-01	XMPHS10-03
XMPHSS06-02	XMPHS10-04
XMPHS06-03	XMPHS12-01
XMPHS06-04	XMPHS12-02
XMPHS08-01	XMPHS12-03
XMPHS08-02	XMPHS12-04

XMPUCS



Union Straight

MODEL(ΦD) Tube(Metric)
XMPUCS 04
XMPUCS 06
XMPUCS 08
XMPUCS 10
XMPUCS 12
XMPUCS 14
XMPUCS 16

XMPULS



Union Elbow

MODEL(ΦD) Tube(Metric)
XMPULS 04
XMPULS 06
XMPULS 08
XMPULS 10
XMPULS 12
XMPULS 14
XMPULS 16

XMPUTS



Union Tee

MODEL(ΦD) Tube(Metric)
XMPUTS 04
XMPUTS 06
XMPUTS 08
XMPUTS 10
XMPUTS 12
XMPUTS 14
XMPUTS 16

XMPMS



Balkhead Vnion

MODEL(ΦD) Tube(Metric)
XMPMS 04
XMPMS 06
XMPMS 08
XMPMS 10
XMPMS 12
XMPMS 14
XMPMS 16

Stainless Steel Push-In Fittings

XMPYS



Union Y

MODEL(ΦD) Tube(Metric)
XMPYS04
XMPYS06
XMPYS08
XMPYS10
XMPYS12

XMNSFS



Union Straight

MODEL(ΦD) Tube(Metric)
XMNSFS04
XMNSFS06
XMNSFS08
XMNSFS10
XMNSFS12

XMPUGS



Union Reducer

MODEL(ΦD1-ΦD1) Tube(Metric)
XMPUGS06-04
XMPUGS08-06
XMPUGS10-06
XMPUGS10-08
XMPUGS14-08
XMPUGS14-10
XMPUGS14-12
XMPUGS16-12
XMPUGS16-14

XMPTGS



Union Tee Reducer

MODEL(ΦD1-ΦD1) Tube(Metric)
XMPTGS06-04
XMPTGS08-06
XMPTGS10-08
XMPTGS12-08
XMPTGS12-10

XMPWS



Union W

MODEL(ΦD1-ΦD1) Tube(Metric)
XMPWS06-04
XMPWS08-06
XMPWS10-08
XMPWS12-08
XMPWS12-10

Stainless Steel Push-In Fittings With G Thread(O-ring)

XMPCS-G



Male Stud

MODEL(ΦD-T) Tube(Metric)-Thread(G)	
XMPCS04-M5	XMPCS10-G02
XMPCS04-G01	XMPCS10-G03
XMPCS04-G02	XMPCS10-G04
XMPCS05-G01	XMPCS12-G01
XMPCS05-G02	XMPCS12-G02
XMPCS06-G01	XMPCS12-G03
XMPCS06-G02	XMPCS12-G04
XMPCS08-G01	XMPCS14-G03
XMPCS08-G02	XMPCS14-G04
XMPCS08-G03	XMPCS16-G03
XMPCS08-G04	XMPCS16-G04
XMPCS10-G01	

XMPLS-G



Male Stud Elbow

MODEL(ΦD-T) Tube(Metric)-Thread(G)	
XMPLS04-M5	XMPLS10-G02
XMPLS04-G01	XMPLS10-G03
XMPLS04-G02	XMPLS10-G04
XMPLS05-G01	XMPLS12-G01
XMPLS05-G02	XMPLS12-G02
XMPLS06-G01	XMPLS12-G03
XMPLS06-G02	XMPLS12-G04
XMPLS08-G01	XMPLS14-G03
XMPLS08-G02	XMPLS14-G04
XMPLS08-G03	XMPLS16-G03
XMPLS08-G04	XMPLS16-G04
XMPLS10-G01	

Metal Speed Controls

Feature

- Accurate regulation of an optimal air flow rate for Precise motion control.
- The compact design provides the comparable rang of speed as the larger standard Speed continue roller do.

Specifcation

Material	Body and collet:Nickel-plated Brass O-ring:NBR(other material is available on request)
Threads	BSPT,BSPP,NPT,Metric threads
Pressure Tube to connect	0.8-16bar(see tube)PU,PE,Nylon 6-11-12
Fluid	Compressed air
Temperature	-1℃ ~60℃ (see data of used tubing)

- When You order Control In Type,PIs Put BAt The End of Model Type.For Example: XMNSE08-02B

XMNSE



Elbow

MODEL(ΦD-T)

Tube(Metric)-Thread(R)		Tube(Inch)-Thread(R)		Tube(Inch)-Thread(NPT)	
XMNSE04-M5	XMNSE08-03	XMNSE1/8-01	XMNSE5/16-03	XMNSE1/8-U10	XMNSE1/4-N02
XMNSE04-M6	XMNSE08-04	XMNSE1/8-02	XMNSE5-16-04	XMNSE1/8-N01	XMNSE1/4-N03
XMNSE04-01	XMNSE10-01	XMNSE5/32-01	XMNSE3/8-01	XMNSE1/8-N02	XMNSE5/16-N01
XMNSE04-02	XMNSE10-02	XMNSE5/32-02	XMNSE3/8-02	XMNSE5/32-U10	XMNSE5/16-N02
XMNSE04-03	XMNSE10-03	XMNSE3/16-01	XMNSE3/8-03	XMNSE5/32-N01	XMNSE5/16-N03
XMNSE06-M5	XMNSE10-04	XMNSE3/16-02	XMNSE3/8-04	XMNSE5/32-N02	XMNSE3/8-N01
XMNSE06-M6	XMNSE12-01	XMNSE3/16-03	XMNSE1/2-02	XMNSE3/16-U10	XMNSE3/8-N02
XMNSE06-01	XMNSE12-02	XMNSE1/4-01	XMNSE1/2-03	XMNSE3/16-N01	XMNSE3/8-N03
XMNSE06-02	XMNSE12-03	XMNSE1/4-02	XMNSE1/2-04	XMNSE3/16-N02	XMNSE3/8-N04
XMNSE06-03	XMNSE12-04	XMNSE1/4-03		XMNSE3/16-N03	XMNSE1/2-N02
XMNSE08-01	XMNSE16-03	XMNSE5/16-01		XMNSE1/4-U10	XMNSE1/2-N03
XMNSE08-02	XMNSE16-04	XMNSE5/16-02		XMNSE1/4-N01	XMNSE1/2-N04

Metal Speed Controls With G Thread(O-ring)

XMNSE-G



Elbow(G thread)

MODEL(ΦD-T)

Tube(Metric)-Thread(G)		Tube(Inch)-Thread(G)	
XMNSE04-G01	XMNSE10-G02	XMNSE1/8-G01	XMNSE5/16-G03
XMNSE04-G02	XMNSE10-G03	XMNSE1/8-G02	XMNSE5-16-G04
XMNSE05-G01	XMNSE10-G04	XMNSE5/32-G01	XMNSE3/8-G01
XMNSE05-G02	XMNSE12-G01	XMNSE5/32-G02	XMNSE3/8-G02
XMNSE06-G01	XMNSE12-G02	XMNSE3/16-G01	XMNSE3/8-G03
XMNSE06-G02	XMNSE12-G03	XMNSE3/16-G02	XMNSE3/8-G04
XMNSE08-G01	XMNSE12-G04	XMNSE3/16-G03	XMNSE1/2-G02
XMNSE08-G02	XMNSE14-G03	XMNSE1/4-G01	XMNSE1/2-G03
XMNSE08-G03	XMNSE14-G04	XMNSE1/4-G02	XMNSE1/2-G04
XMNSE08-G04	XMNSE16-G03	XMNSE1/4-G03	
XMNSE10-G01	XMNSE16-G04	XMNSE5/16-G01	
		XMNSE5/16-G02	

Rapid Fittings For The Plastic Tubings

Feature

- The rapid fittings can be used with rigid nylon tubes.
- A locking nut is provided and can be tightened both manually and With a spanner.
- The special shape of the guiding cone ensures that the tube can not be accidentally cut.

Construction

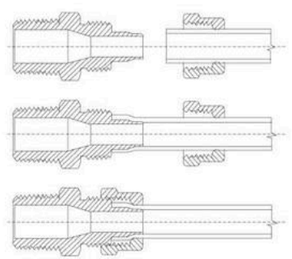

Specifcation

Material	Body and collet:Nickel-plated Brass O-ring:NBR(other material is available on request)
Threads	BSPT,BSPP,NPT,Metric threads
Pressure	0.8-16bar(see tube)
Fluid	Compressed air
Temperature	-10℃ ~60℃ (see data of used tubing)

Rapid Fittings For The Plastic Tubings

XRPC



Male Straight

MODEL(ΦD-T)

Tube(Metric)-Thread(R)			Tube(Metric)-Thread(G)		
XRPC-5/3-M5	XRPC-6/4-02	XRPC-10/8-02	XRPC-5/3-G01	XRPC-8/6-G02	XRPC-10/8-G04
XRPC-5/3-M6	XRPC-6/4-03	XRPC-10/8-03	XRPC-6/4-G01	XRPC-8/6-G03	XRPC-12/10-G03
XRPC-5/3-01	XRPC-8/6-01	XRPC-10/8-04	XRPC-6/4-G02	XRPC-10/8-G01	XRPC-12/10-G04
XRPC-6/4-M5	XRPC-8/6-02	XRPC-12/10-03	XRPC-6/4-G03	XRPC-10/8-G02	
XRPC-6/4-M6	XRPC-8/6-03	XRPC-12/10-04	XRPC-8/6-G01	XRPC-10/8-G03	
XRPC-6/4-01	XRPC-10/8-01				

XRSPC



Swivel Male Straight

MODEL(ΦD-T)

Tube(Metric)-Thread(R)			Tube(Metric)-Thread(G)		
XRSPC-5/3-M5	XRSPC-6/4-02	XRSPC-10/8-02	XRSPC-5/3-G01	XRSPC-8/6-G01	XRSPC-10/8-G02
XRSPC-5/3-M6	XRSPC-6/4-03	XRSPC-10/8-03	XRSPC-6/4-G01	XRSPC-8/6-G02	XRSPC-10/8-G03
XRSPC-5/3-01	XRSPC-8/6-01	XRSPC-10/8-04	XRSPC-6/4-G02	XRSPC-8/6-G03	XRSPC-10/8-G04
XRSPC-6/4-M5	XRSPC-8/6-02	XRSPC-12/10-03	XRSPC-6/4-G03	XRSPC-10/8-G01	XRSPC-12/10-G03
XRSPC-6/4-M6	XRSPC-8/6-03	XRSPC-12/10-04			XRSPC-12/10-G04
XRSPC-6/4-01	XRSPC-10/8-01				

XRPCF



Female Straight

MODEL(ΦD-T)

Tube(Metric)-Thread(R)			Tube(Metric)-Thread(G)		
XRPCF-5/3-M5	XRPCF-6/4-01	XRPCF-10/8-01	XRPCF-5/3-G01	XRPCF-8/6-G02	XRPCF-10/8-G04
XRPCF-5/3-M6	XRPCF-6/4-02	XRPCF-10/8-02	XRPCF-6/4-G01	XRPCF-8/6-G03	XRPCF-12/10-G03
XRPCF-5/3-01	XRPCF-6/4-03	XRPCF-10/8-03	XRPCF-6/4-G02	XRPCF-10/8-G01	XRPCF-12/10-G04
XRPCF-6/4-M5	XRPCF-8/6-01	XRPCF-10/8-04	XRPCF-6/4-G03	XRPCF-10/8-G02	
XRPCF-6/4-M6	XRPCF-8/6-02	XRPCF-12/10-03	XRPCF-8/6-G01	XRPCF-10/8-G03	
	XRPCF-8/6-03	XRPCF-12/10-04			

XRPL



Swivel Male Elbow

MODEL(ΦD-T)

Tube(Metric)-Thread(R)			Tube(Metric)-Thread(G)		
XRPL-5/3-M5	XRPL-6/4-02	XRPL-10/8-02	XRPL-5/3-G01	XRPL-8/6-G02	XRPL-10/8-G04
XRPL-5/3-M6	XRPL-6/4-03	XRPL-10/8-03	XRPL-6/4-G01	XRPL-8/6-G03	XRPL-12/10-G03
XRPL-5/3-01	XRPL-8/6-01	XRPL-10/8-04	XRPL-6/4-G02	XRPL-10/8-G01	XRPL-12/10-G04
XRPL-6/4-M5	XRPL-8/6-02	XRPL-12/10-03	XRPL-6/4-G03	XRPL-10/8-G02	
XRPL-6/4-M6	XRPL-8/6-03	XRPL-12/10-04	XRPL-8/6-G01	XRPL-10/8-G03	
XRPL-6/4-01	XRPL-10/8-01				

XRPLN



Male Elbow

MODEL(ΦD-T)

Tube(Metric)-Thread(R)			Tube(Metric)-Thread(G)		
XRPLN-5/3-M5	XRPLN-6/4-02	XRPLN-10/8-02	XRPLN-5/3-G01	XRPLN-8/6-G01	XRPLN-10/8-G03
XRPLN-5/3-M6	XRPLN-6/4-03	XRPLN-10/8-03	XRPLN-6/4-G01	XRPLN-8/6-G02	XRPLN-10/8-G04
XRPLN-5/3-01	XRPLN-8/6-01	XRPLN-10/8-04	XRPLN-6/4-G02	XRPLN-8/6-G03	XRPLN-12/10-G03
XRPLN-6/4-M5	XRPLN-8/6-02	XRPLN-12/10-03	XRPLN-6/4-G03	XRPLN-10/8-G01	XRPLN-12/10-G04
XRPLN-6/4-M6	XRPLN-8/6-03	XRPLN-12/10-04		XRPLN-10/8-G02	
XRPLN-6/4-01	XRPLN-10/8-01				

XRPLF



Female Elbow

MODEL(ΦD-T)

Tube(Metric)-Thread(R)			Tube(Metric)-Thread(G)		
XRPLF-5/3-M5	XRPLF-6/4-02	XRPLF-10/8-02	XRPLF-5/3-G01	XRPLF-8/6-G01	XRPLF-10/8-G03
XRPLF-5/3-M6	XRPLF-6/4-03	XRPLF-10/8-03	XRPLF-6/4-G01	XRPLF-8/6-G02	XRPLF-10/8-G04
XRPLF-5/3-01	XRPLF-8/6-01	XRPLF-10/8-04	XRPLF-6/4-G02	XRPLF-8/6-G03	XRPLF-12/10-G03
XRPLF-6/4-M5	XRPLF-8/6-02	XRPLF-12/10-03	XRPLF-6/4-G03	XRPLF-10/8-G01	XRPLF-12/10-G04
XRPLF-6/4-M6	XRPLF-8/6-03	XRPLF-12/10-04		XRPLF-10/8-G02	
XRPLF-6/4-01	XRPLF-10/8-01				

Rapid Fittings For The Plastic Tubings

XRPT



Swivel Male Tee

MODEL(ΦD-T)					
Tube(Metric)-Thread(R)			Tube(Metric)-Thread(G)		
XRPT-5/3-M5	XRPT-6/4-02	XRPT-10/8-02	XRPT-5/3-G01	XRPT-8/6-G02	XRPT-10/8-G04
XRPT-5/3-M6	XRPT-6/4-03	XRPT-10/8-03	XRPT-6/4-G01	XRPT-8/6-G03	XRPT-12/10-G03
XRPT-5/3-01	XRPT-8/6-01	XRPT-10/8-04	XRPT-6/4-G02	XRPT-10/8-G01	XRPT-12/10-G04
XRPT-6/4-M5	XRPT-8/6-02	XRPT-12/10-03	XRPT-6/4-G03	XRPT-10/8-G02	
XRPT-6/4-M6	XRPT-8/6-03	XRPT-12/10-04	XRPT-8/6-G01	XRPT-10/8-G03	
XRPT-6/4-01	XRPT-10/8-01				

XRPTN



Male Tee

MODEL(ΦD-T)					
Tube(Metric)-Thread(R)			Tube(Metric)-Thread(G)		
XRPTN-5/3-M5	XRPTN-6/4-02	XRPTN-10/8-02	XRPTN-5/3-G01	XRPTN-8/6-G02	XRPTN-10/8-G04
XRPTN-5/3-M6	XRPTN-6/4-03	XRPTN-10/8-03	XRPTN-6/4-G01	XRPTN-8/6-G03	XRPTN-12/10-G03
XRPTN-5/3-01	XRPTN-8/6-01	XRPTN-10/8-04	XRPTN-6/4-G02	XRPTN-10/8-G01	XRPTN-12/10-G04
XRPTN-6/4-M5	XRPTN-8/6-02	XRPTN-12/10-03	XRPTN-6/4-G03	XRPTN-10/8-G02	
XRPTN-6/4-M6	XRPTN-8/6-03	XRPTN-12/10-04	XRPTN-8/6-G01	XRPTN-10/8-G03	
XRPTN-6/4-01	XRPTN-10/8-01				

XRPD



Swivel Male Run Tee

MODEL(ΦD-T)					
Tube(Metric)-Thread(R)			Tube(Metric)-Thread(G)		
XRPD-5/3-M5	XRPD-6/4-02	XRPD-10/8-02	XRPD-5/3-G01	XRPD-8/6-G02	XRPD-10/8-G04
XRPD-5/3-M6	XRPD-6/4-03	XRPD-10/8-03	XRPD-6/4-G01	XRPD-8/6-G03	XRPD-12/10-G03
XRPD-5/3-01	XRPD-8/6-01	XRPD-10/8-04	XRPD-6/4-G02	XRPD-10/8-G01	XRPD-12/10-G04
XRPD-6/4-M5	XRPD-8/6-02	XRPD-12/10-03	XRPD-6/4-G03	XRPD-10/8-G02	
XRPD-6/4-M6	XRPD-8/6-03	XRPD-12/10-04	XRPD-8/6-G01	XRPD-10/8-G03	
XRPD-6/4-01	XRPD-10/8-01				

XRPDN



Male Run Tee

MODEL(ΦD-T)					
Tube(Metric)-Thread(R)			Tube(Metric)-Thread(G)		
XRPDN-5/3-M5	XRPDN-6/4-02	XRPDN-10/8-02	XRPDN-5/3-G01	XRPDN-8/6-G02	XRPDN-10/8-G04
XRPDN-5/3-M6	XRPDN-6/4-03	XRPDN-10/8-03	XRPDN-6/4-G01	XRPDN-8/6-G03	XRPDN-12/10-G03
XRPDN-5/3-01	XRPDN-8/6-01	XRPDN-10/8-04	XRPDN-6/4-G02	XRPDN-10/8-G01	XRPDN-12/10-G04
XRPDN-6/4-M5	XRPDN-8/6-02	XRPDN-12/10-03	XRPDN-6/4-G03	XRPDN-10/8-G02	
XRPDN-6/4-M6	XRPDN-8/6-03	XRPDN-12/10-04	XRPDN-8/6-G01	XRPDN-10/8-G03	
XRPDN-6/4-01	XRPDN-10/8-01				

XRPH



Single Male Banjo

MODEL(ΦD-T)					
Tube(Metric)-Thread(R)			Tube(Metric)-Thread(G)		
XRPH-5/3-M5	XRPH-6/4-02	XRPH-10/8-02	XRPH-5/3-G01		XRPH-10/8-G04
XRPH-5/3-M6	XRPH-6/4-03	XRPH-10/8-03	XRPH-6/4-G01		XRPH-12/10-G03
XRPH-5/3-01	XRPH-8/6-01	XRPH-10/8-04	XRPH-6/4-G02		XRPH-12/10-G04
XRPH-6/4-M5	XRPH-8/6-02	XRPH-12/10-03	XRPH-6/4-G03		
XRPH-6/4-M6	XRPH-8/6-03	XRPH-12/10-04	XRPH-8/6-G01		
XRPH-6/4-01	XRPH-10/8-01				

XRPDH



Double Male Banjo

MODEL(ΦD-T)					
Tube(Metric)-Thread(R)			Tube(Metric)-Thread(G)		
XRDPH-5/3-M5	XRDPH-6/4-02	XRDPH-10/8-02	XRDPH-5/3-G01	XRDPH-8/6-G02	XRDPH-10/8-G04
XRDPH-5/3-M6	XRDPH-6/4-03	XRDPH-10/8-03	XRDPH-6/4-G01	XRDPH-8/6-G03	XRDPH-12/10-G03
XRDPH-5/3-01	XRDPH-8/6-01	XRDPH-10/8-04	XRDPH-6/4-G02	XRDPH-10/8-G01	XRDPH-12/10-G04
XRDPH-6/4-M5	XRDPH-8/6-02	XRDPH-12/10-03	XRDPH-6/4-G03	XRDPH-10/8-G02	
XRDPH-6/4-M6	XRDPH-8/6-03	XRDPH-12/10-04	XRDPH-8/6-G01	XRDPH-10/8-G03	
XRDPH-6/4-01	XRDPH-10/8-01				

Rapid Fittings For The Plastic Tubings

XRTPH



Tripe Male Banjo

MODEL(ΦD-T)			
Ube(Metric)-Thread(R)		Tube(Metric)-Thread(G)	
XRTPH-5/3-M5	XRTPH-8/6-02	XRTPH-5/3-G01	XRTPH-10/8-G02
XRTPH-5/3-M6	XRTPH-8/6-03	XRTPH-6/4-G01	XRTPH-10/8-G03
XRTPH-5/3-01	XRTPH-10/8-01	XRTPH-6/4-G02	XRTPH-10/8-G04
XRTPH-6/4-M5	XRTPH-10/8-02	XRTPH-6/4-G03	XRTPH-12/10-G03
XRTPH-6/4-M6	XRTPH-10/8-03	XRTPH-8/6-G01	XRTPH-12/10-G04
XRTPH-6/4-01	XRTPH-10/8-04	XRTPH-8/6-G02	
XRTPH-6/4-02	XRTPH-12/10-03	XRTPH-8/6-G03	
XRTPH-6/4-03	XRTPH-12/10-04	XRTPH-10/8-G01	
XRTPH-8/6-01			

XRPUC



Union Straight

MODEL(ΦD)
Tube(Metric)
XRPUC-5/3
XRPUC-6/4
XRPUC-8/6
XRPUC-10/8
XRPUC-12/10

XRPUL



Elbow

MODEL(ΦD)
Tube(Metric)
XRPUL-5/3
XRPUL-6/4
XRPUL-8/6
XRPUL-10/8
XRPUL-12/10

XRPUT



Union Straight

MODEL(ΦD)
Tube(Metric)
XRPUT-5/3
XRPUT-6/4
XRPUT-8/6
XRPUT-10/8
XRPUT-12/10

XRPZA



Cross

MODEL(ΦD-T)
Tube(Metric)
XRPZA-5/3
XRPZA-6/4
XRPZA-8/6
XRPZA-10/8
XRPZA-12/10

XRPM



Bulkhead Union

MODEL(ΦD)
Tube(Metric)
XRPM-5/3
XRPM-6/4
XRPM-8/6
XRPM-10/8
XRPM-12/10

XRM



Locking Nut

MODEL(ΦD)
Tube(Metric)
XRM-5/3
XRM-6/4
XRM-8/6
XRM-10/8
XRM-12/10

Pipe Joint Fittings

Specifcation

- The Pipe joint fttings can be used with rigid nylon tubes.
- A locking nut iS provided and Can be tightened both manually and with a spanner.
- The special shape of the guiding cone ensures that the tube can not be ac-cidentally cut.

Construction

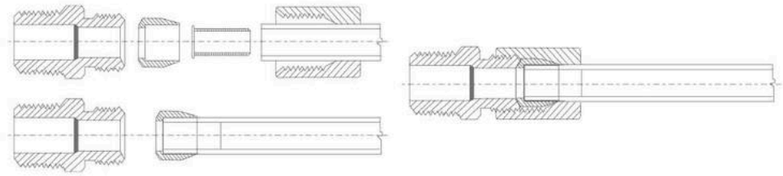

Pipe Joint Fittings

XQPC



Male Straight

MODEL(ΦD-T)					
Tube(Metric)-Thread(R)			Tube(Metric)-Thread(G)		
XQPC 04-01	XQPC 08-02	XQPC 12-02	XQPC 04-G01	XQPC 08-G02	XQPC 12-G02
XQPC 04-02	XQPC 08-03	XQPC 12-03	XQPC 04-G02	XQPC 08-G03	XQPC 12-G03
XQPC 06-01	XQPC 10-02	XQPC 12-04	XQPC 06-G01	XQPC 10-G02	XQPC 12-G04
XQPC 06-02	XQPC 10-03		XQPC 06-G02	XQPC 10-G03	
XQPC 08-01	XQPC 10-04		XQPC 08-G01	XQPC 10-G04	

XQPL



Male Elbow

MODEL(ΦD-T)					
Tube(Metric)-Thread(R)			Tube(Metric)-Thread(G)		
XQPL 04-01	XQPL 08-02	XQPL 12-02	XQPL 04-G01	XQPL 08-G02	XQPL 12-G02
XQPL 04-02	XQPL 08-03	XQPL 12-03	XQPL 04-G02	XQPL 08-G03	XQPL 12-G03
XQPL 06-01	XQPL 10-02	XQPL 12-04	XQPL 06-G01	XQPL 10-G02	XQPL 12-G04
XQPL 06-02	XQPL 10-03		XQPL 06-G02	XQPL 10-G03	
XQPL 08-01	XQPL 10-04		XQPL 08-G01	XQPL 10-G04	

XQPCF



Female Elbow

MODEL(ΦD-T)					
Tube(Metric)-Thread(R)			Tube(Metric)-Thread(G)		
XQPCF 04-01	XQPCF 08-02	XQPCF 12-02	XQPCF 04-G01	XQPCF 08-G02	XQPCF 12-G02
XQPCF 04-02	XQPCF 08-03	XQPCF 12-03	XQPCF 04-G02	XQPCF 08-G03	XQPCF 12-G03
XQPCF 06-01	XQPCF 10-02	XQPCF 12-04	XQPCF 06-G01	XQPCF 10-G02	XQPCF 12-G04
XQPCF 06-02	XQPCF 10-03		XQPCF 06-G02	XQPCF 10-G03	
XQPCF 08-01	XQPCF 10-04		XQPCF 08-G01	XQPCF 10-G04	

XQPT



Male Tee

MODEL(ΦD-T)					
Tube(Metric)-Thread(R)			Tube(Metric)-Thread(G)		
XQPT 04-01	XQPT 08-02	XQPT 12-02	XQPT 04-G01	XQPT 08-G02	XQPT 12-G02
XQPT 04-02	XQPT 08-03	XQPT 12-03	XQPT 04-G02	XQPT 08-G03	XQPT 12-G03
XQPT 06-01	XQPT 10-02	XQPT 12-04	XQPT 06-G01	XQPT 10-G02	XQPT 12-G04
XQPT 06-02	XQPT 10-03		XQPT 06-G02	XQPT 10-G03	
XQPT 08-01	XQPT 10-04		XQPT 08-G01	XQPT 10-G04	

XQPD



Run Tee

MODEL(ΦD-T)					
Tube(Metric)-Thread(R)			Tube(Metric)-Thread(G)		
XQPD 04-01	XQPD 08-02	XQPD 12-02	XQPD 04-G01	XQPD 08-G02	XQPD 12-G02
XQPD 04-02	XQPD 08-03	XQPD 12-03	XQPD 04-G02	XQPD 08-G03	XQPD 12-G03
XQPD 06-01	XQPD 10-02	XQPD 12-04	XQPD 06-G01	XQPD 10-G02	XQPD 12-G04
XQPD 06-02	XQPD 10-03		XQPD 06-G02	XQPD 10-G03	
XQPD 08-01	XQPD 10-04		XQPD 08-G01	XQPD 10-G04	

XQPUC



Union Straight

MODEL(ΦD)
Tube(Metric)
XQPUC 04
XQPUC 06
XQPUC 08
XQPUC 10
XQPUC 12

XQPUL



Union Elbow

MODEL(ΦD)
Tube(Metric)
XQPUL 04
XQPUL 06
XQPUL 08
XQPUL 10
XQPUL 12

XQPUT



Union Tee

MODEL(ΦD)
Tube(Metric)
XQPUT 04
XQPUT 06
XQPUT 08
XQPUT 10
XQPUT 12

Pipe Joint Fittings

XQPZA



Union Cross

MODEL(ΦD)
Tube(Metric)
XQPZA 04
XQPZA 06
XQPZA 08
XQPZA 10
XQPZA 12

XQPM



Bulkhead Union

MODEL(ΦD)
Tube(Metric)
XQPM 04
XQPM 06
XQPM 08
XQPM 10
XQPM 12

XQS



Nut

MODEL(ΦD-T)
Tube(Metric)
XQS 04
XQS 06
XQS 08
XQS 10
XQS 12

XQI



MODEL(ΦD)
Tube(Metric)
XQI 04
XQI 06
XQI 08
XQI 10
XQI 12

Pipe Fittings

Feature

- When involved in factory maintenance or Plant installation,it's often difficult to be certain which size of fittings with be required, Our Pipe fittings provide a cost effective solution to solve this problem.

Specifcation

Material	Nickel-plated Brass
Threads	BSPT,BSPP,NPT,Metric threads
Pressure	(See tube)
Fluid	Compressed air
Temperature	(See data of used tubing)

XPSM



Straight Male

MODEL(ΦT1-ΦT1)					
Thread(R)T1-Thread(R)T2		Thread(NPT)T1-Thread(NPT)T2		Thread(G)T1-Thread(G)T2	
XPSM 01-01	XPSM 06-06	XPSM N01-N01	XPSM N06-N06	XPSM G01-G01	XPSM G06-G06
XPSM 02-02	XPSM 06-04	XPSM N02-N02	XPSM N06-N04	XPSM G02-G02	XPSM G06-G04
XPSM 02-01	XPSM 06-03	XPSM N02-N01	XPSM N06-N03	XPSM G02-G01	XPSM G06-G03
XPSM 03-03	XPSM 06-02	XPSM N03-N03	XPSM N06-N02	XPSM G03-G03	XPSM G06-G02
XPSM 03-02	XPSM 08-08	XPSM N03-N02	XPSM N08-N08	XPSM G03-G02	XPSM G08-G08
XPSM 03-01	XPSM 08-06	XPSM N03-N01	XPSM N08-N06	XPSM G03-G01	XPSM G08-G06
XPSM 04-04	XPSM 08-04	XPSM N04-N04	XPSM N08-N04	XPSM G04-G04	XPSM G08-G04
XPSM 04-03	XPSM 08-03	XPSM N04-N03	XPSM N08-N03	XPSM G04-G03	XPSM G08-G03
XPSM 04-02		XPSM N04-N02		XPSM G04-G02	
XPSM 04-01		XPSM N04-N01		XPSM G04-G01	

XPSF



Straight Female

MODEL(ΦT1-ΦT1)					
Thread(R)T1-Thread(R)T2		Thread(NPT)T1-Thread(NPT)T2		Thread(G)T1-Thread(G)T2	
XPSF 01-01	XPSF 04-01	XPSF N01-N01	XPSF N04-N01	XPSF G01-G01	XPSF G04-G01
XPSF 02-02	XPSF 06-06	XPSF N02-N02	XPSF N06-N06	XPSF G02-G02	XPSF G06-G06
XPSF 02-01	XPSF 06-04	XPSF N02-N01	XPSF N06-N04	XPSF G02-G01	XPSF G06-G04
XPSF 03-03	XPSF 06-03	XPSF N03-N03	XPSF N06-N03	XPSF G03-G03	XPSF G06-G03
XPSF 03-02	XPSF 06-02	XPSF N03-N02	XPSF N06-N02	XPSF G03-G02	XPSF G06-G02
XPSF 03-01	XPSF 08-08	XPSF N03-N01	XPSF N08-N08	XPSF G03-G01	XPSF G08-G08
XPSF 04-04	XPSF 08-06	XPSF N04-N04	XPSF N08-N06	XPSF G04-G04	XPSF G08-G06
XPSF 04-03	XPSF 08-04	XPSF N04-N03	XPSF N08-N04	XPSF G04-G03	XPSF G08-G04
XPSF 04-02	XPSF 08-03	XPSF N04-N02	XPSF N08-N03	XPSF G04-G02	XPSF G08-G03

Pipe Fittings

XPOF



Plug

MODEL(T)	
Thread(R)	Thread(NPT)
XPOF G01	XPOF N01
XPOF G02	XPOF N02
XPOF G03	XPOF N03
XPOF G04	XPOF N04
XPOF G06	XPOF N06
XPOF G08	XPOF N08

XPEL



Equal Male Stud Elbow

MODEL(ΦD-T)	
Thread(R)	Thread(NPT)
XPEL 01	XPEL 01N01
XPEL 02	XPEL 02N02
XPEL 03	XPEL 03N03
XPEL 04	XPEL 04N04
XPEL 06	XPEL 06N06
XPEL 08	XPEL 08N08

XPSMF



Straight Male To Female

MODEL(ΦT1-ΦT2)					
Thread(R)T1-Thread(R)T2		Thread(NPT)T1-Thread(NPT)T2		Thread(G)T1-Thread(G)T2	
XPSMF 01-01	XPSMF 06-06	XPSMF N01-N01	XPSMF N06-N06	XPSMF G01-G01	XPSMF G06-G06
XPSMF 02-02	XPSMF 06-04	XPSMF N02-N02	XPSMF N06-N04	XPSMF G02-G02	XPSMF G06-G04
XPSMF 02-01	XPSMF 06-03	XPSMF N02-N01	XPSMF N06-N03	XPSMF G02-G01	XPSMF G06-G03
XPSMF 03-03	XPSMF 06-02	XPSMF N03-N03	XPSMF N06-N02	XPSMF G03-G03	XPSMF G06-G02
XPSMF 03-02	XPSMF 08-08	XPSMF N03-N02	XPSMF N08-N08	XPSMF G03-G02	XPSMF G08-G08
XPSMF 03-01	XPSMF 08-06	XPSMF N03-N01	XPSMF N08-N06	XPSMF G03-G01	XPSMF G08-G06
XPSMF 04-04	XPSMF 08-04	XPSMF N04-N04	XPSMF N08-N04	XPSMF G04-G04	XPSMF G08-G04
XPSMF 04-03	XPSMF 08-03	XPSMF N04-N03	XPSMF N08-N03	XPSMF G04-G03	XPSMF G08-G03
XPSMF 04-02		XPSMF N04-N02		XPSMF G04-G02	
XPSMF 04-01		XPSMF N04-N01		XPSMF G04-G01	

XPFL



Equal Female Stud Elbow

MODEL(T)	
Thread(G)	Thread(NPT)
XPFL 01	XPFL N01
XPFL 02	XPFL N02
XPFL 03	XPFL N03
XPFL 04	XPFL N04
XPFL 06	XPFL N06
XPFL 08	XPFL N08

XPRMF



Ruduce Male to Female

MODEL(ΦT1-ΦT2)		
Thread(R)T1-T2	Thread(NPT)T1-T2	Thread(G)T1-T2
XPRMF 02-01	XPRMF N02-N01	XPRMF G02-G01
XPRMF 03-01	XPRMF N03-N01	XPRMF G03-G01
XPRMF 03-02	XPRMF N03-N02	XPRMF G03-G02
XPRMF 04-01	XPRMF N04-N01	XPRMF G04-G01
XPRMF 04-02	XPRMF N04-N02	XPRMF G04-G02
XPRMF 04-03	XPRMF N04-N03	XPRMF G04-G03
XPRMF 06-02	XPRMF N06-N02	XPRMF G06-G02
XPRMF 06-03	XPRMF N06-N03	XPRMF G06-G03
XPRMF 06-04	XPRMF N06-N04	XPRMF G06-G04

XPEFL



Equal Female Stud Elbow

MODEL(T)	
Thread(R)	Thread(NPT)
XPEFL 01	XPEFL N01
XPEFL 02	XPEFL N02
XPEFL 03	XPEFL N03
XPEFL 04	XPEFL N04
XPEFL 06	XPEFL N06
XPEFL 08	XPEFL N08

XPO



PIUG

MODEL(T)		
Thread(R)	Thread(NPT)	Thread(G)
XPO M5	XPO N01	XPO G01
XPO 01	XPO N02	XPO G02
XPO 02	XPO N03	XPO G03
XPO 03	XPO N04	XPO G04
XPO 04	XPO N06	XPO G06
XPO 06	XPO N08	XPO G08
XPO 08		

XPOHH



PLUG

MODEL(T)		
Thread(R)	Thread(NPT)	Thread(G)
XPOHH M5	XPOHH N01	XPOHH G01
XPOHH 01	XPOHH N02	XPOHH G02
XPOHH 02	XPOHH N03	XPOHH G03
XPOHH 03	XPOHH N04	XPOHH G04
XPOHH 04	XPOHH N06	XPOHH G06
XPOHH 06	XPOHH N08	XPOHH G08
XPOHH 08		

XPOH



PIUG

MODEL(T)		
Thread(R)	Thread(NPT)	Thread(G)
XPOH M5	XPOH N01	XPOH G01
XPOH 01	XPOH N02	XPOH G02
XPOH 02	XPOH N03	XPOH G03
XPOH 03	XPOH N04	XPOH G04
XPOH 04	XPOH N06	XPOH G06
XPOH 06	XPOH N08	XPOH G08
XPOH 08		

Pipe Fittings

XPZ



In&Out Thread

MODEL(ΦT1-ΦT2)		
Thread(R)T1-(G)T2	Thread(NPT)T1-T2	Thread(G)T1-T2
XPZ 02-G01	XPZ N02-N01	XPZ G02-G01
XPZ 03-G01	XPZ N03-N01	XPZ G03-G01
XPZ 03-G02	XPZ N03-N02	XPZ G03-G02
XPZ 04-G01	XPZ N04-N01	XPZ G04-G01
XPZ 04-G02	XPZ N04-N02	XPZ G04-G02
XPZ 04-G03	XPZ N04-N03	XPZ G04-G03
XPZ 06-G02	XPZ N06-N02	XPZ G06-G02
XPZ 06-G03	XPZ N06-N03	XPZ G06-G03
XPZ 06-G04	XPZ N06-N04	XPZ G06-G04

XPMT



Male Stud Branch Tee

MODEL(T)	
Thread(G)	Thread(NPT)
XPMT 01	XPMT N01
XPMT 02	XPMT N02
XPMT 03	XPMT N03
XPMT 04	XPMT N04
XPMT 06	XPMT N06
XPMT 08	XPMT N08

XPSMT



Male Tee

MODEL(T)	
Thread(G)	Thread(NPT)
XPSMT 01	XPSMT N01
XPSMT 02	XPSMT N02
XPSMT 03	XPSMT N03
XPSMT 04	XPSMT N04
XPSMT 06	XPSMT N06
XPSMT 08	XPSMT N08

XPSFT



Male To Female Tee

MODEL(T)	
Thread(G)	Thread(NPT)
XPSFT 01	XPSFT N01
XPSFT 02	XPSFT N02
XPSFT 03	XPSFT N03
XPSFT 04	XPSFT N04
XPSFT 06	XPSFT N06
XPSFT 08	XPSFT N08

XPFT



Equal Female Tee

MODEL(T)	
Thread(G)	Thread(NPT)
XPFT 01	XPFT N01
XPFT 02	XPFT N02
XPFT 03	XPFT N03
XPFT 04	XPFT N04
XPFT 06	XPFT N06
XPFT 08	XPFT N08

XPMST



Male Run Tee

MODEL(T)	
Thread(G)	Thread(NPT)
XPMST 01	XPMST N01
XPMST 02	XPMST N02
XPMST 03	XPMST N03
XPMST 04	XPMST N04
XPMST 06	XPMST N06
XPMST 08	XPMST N08

XPMMT



Double Male to Femle

MODEL(T)	
Thread(G)	Thread(NPT)
XPMMT 01	XPMMT N01
XPMMT 02	XPMMT N02
XPMMT 03	XPMMT N03
XPMMT 04	XPMMT N04
XPMMT 06	XPMMT N06
XPMMT 08	XPMMT N08

XPYF



Female Y

MODEL(T)	
Thread(G)	Thread(NPT)
XPYF G01	XPYF N01
XPYF G02	XPYF N02
XPYF G03	XPYF N03
XPYF G04	XPYF N04

XPHTM



Male Barb

MODEL(ΦD-T)					
Tube(Metric)-Thread(R)		Tube(Metric)-Thread(G)		Tube(Metric)-Thread(NPT)	
XPHTM05-01	XPHTM10-02	XPHTM05-G01	XPHTM10-G02	XPHTM05-N01	XPHTM10-N02
XPHTM05-02	XPHTM10-03	XPHTM05-G02	XPHTM10-G03	XPHTM05-N02	XPHTM10-N03
XPHTM07-01	XPHTM12-02	XPHTM07-G01	XPHTM12-G02	XPHTM07-N01	XPHTM12-N02
XPHTM07-02	XPHTM12-03	XPHTM07-G02	XPHTM12-G03	XPHTM07-N02	XPHTM12-N03
XPHTM08-01	XPHTM12-04	XPHTM08-G01	XPHTM12-G04	XPHTM08-N01	XPHTM12-N04
XPHTM08-02	XPHTM17-03	XPHTM08-G02	XPHTM17-G03	XPHTM08-N02	XPHTM17-N03
XPHTM09-01	XPHTM17-04	XPHTM09-G01	XPHTM17-G04	XPHTM09-N01	XPHTM17-N04
XPHTM09-02	XPHTM18-03	XPHTM09-G02	XPHTM18-G03	XPHTM09-N02	XPHTM18-N03
XPHTM09-03	XPHTM18-04	XPHTM09-G03	XPHTM18-G04	XPHTM09-N03	XPHTM18-N04
XPHTM10-01		XPHTM10-G01		XPHTM10-N01	

Pipe Fittings

XPHTF

MODEL(ΦD-T)

Tube(Metric)-Thread(R)		Tube(Metric)-Thread(G)		Tube(Metric)-Thread(NPT)	
XPHTF05-01	XPHTF10-02	XPHTF05-G01	XPHTF10-G02	XPHTF05-N01	XPHTF10-N02
XPHTF05-02	XPHTF10-03	XPHTF05-G02	XPHTF10-G03	XPHTF05-N02	XPHTF10-N03
XPHTF07-01	XPHTF12-02	XPHTF07-G01	XPHTF12-G02	XPHTF07-N01	XPHTF12-N02
XPHTF07-02	XPHTF12-03	XPHTF07-G02	XPHTF12-G03	XPHTF07-N02	XPHTF12-N03
XPHTF08-01	XPHTF12-04	XPHTF08-G01	XPHTF12-G04	XPHTF08-N01	XPHTF12-N04
XPHTF08-02	XPHTF17-03	XPHTF08-G02	XPHTF17-G03	XPHTF08-N02	XPHTF17-N03
XPHTF09-01	XPHTF17-04	XPHTF09-G01	XPHTF17-G04	XPHTF09-N01	XPHTF17-N04
XPHTF09-02	XPHTF18-03	XPHTF09-G02	XPHTF18-G03	XPHTF09-N02	XPHTF18-N03
XPHTF09-03	XPHTF18-04	XPHTF09-G03	XPHTF18-G04	XPHTF09-N03	XPHTF18-N04
XPHTF10-01		XPHTF10-G01		XPHTF10-N01	

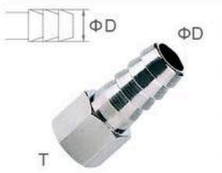

Female Barb

XPLB

MODEL(ΦD-T)

Tube(Metric)-Thread(R)		Tube(Metric)-Thread(G)		Tube(Metric)-Thread(NPT)	
XPLB05-01	XPLB10-02	XPLB05-G01	XPLB10-G02	XPLB05-N01	XPLB10-N02
XPLB05-02	XPLB10-03	XPLB05-G02	XPLB10-G03	XPLB05-N02	XPLB10-N03
XPLB07-01	XPLB12-02	XPLB07-G01	XPLB12-G02	XPLB07-N01	XPLB12-N02
XPLB07-02	XPLB12-03	XPLB07-G02	XPLB12-G03	XPLB07-N02	XPLB12-N03
XPLB08-01	XPLB12-04	XPLB08-G01	XPLB12-G04	XPLB08-N01	XPLB12-N04
XPLB08-02	XPLB17-03	XPLB08-G02	XPLB17-G03	XPLB08-N02	XPLB17-N03
XPLB09-01	XPLB17-04	XPLB09-G01	XPLB17-G04	XPLB09-N01	XPLB17-N04
XPLB09-02	XPLB18-03	XPLB09-G02	XPLB18-G03	XPLB09-N02	XPLB18-N03
XPLB09-03	XPLB18-04	XPLB09-G03	XPLB18-G04	XPLB09-N03	XPLB18-N04
XPLB10-01		XPLB10-G01		XPLB10-N01	



Male Elbow Barb

XPYT

MODEL(ΦD-T)

Thread(G)	Thread(NPT)
XPYT 01	XPYT N01
XPYT 02	XPYT N02
XPYT 03	XPYT N03
XPYT 04	XPYT N04



Female to Male Y

XPMFM

MODEL(ΦD-T)

Thread(G)	Thread(NPT)
XPMFM G01	XPMFM N01
XPMFM G02	XPMFM N02
XPMFM G03	XPMFM N03
XPMFM G04	XPMFM N04



Female Bulkhead

XPFC

MODEL(T)

Thread(G)	Thread(NPT)
XPFC G01	XPFC N01
XPFC G02	XPFC N02
XPFC G03	XPFC N03
XPFC G04	XPFC N04



Equal Female Cross

XPBB

MODEL(ΦD)

Tube
PBB 05
PBB 07
PBB 08
PBB 09
PBB 10
PBB 12
PBB 17
PBB 18



Barb Union

XPFCT

MODEL(T)

Thread(G)	Thread(NPT)
XPFCT 01	XPFCT N01
XPFCT 02	XPFCT N02
XPFCT 03	XPFCT N03
XPFCT 04	XPFCT N04



Equal Female To Male Cross

XPTB

MODEL(ΦD)

Tube
PTB 05
PTB 07
PTB 08
PTB 09
PTB 10
PTB 12
PTB 17
PTB 18

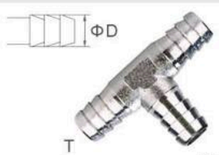

Barb T

Quick Coupler

SH

Model	Size
SH-20	5/16" Tube
SH-30	3/8" Tube
SH-40	1/2" Tube



SF

Model	Size
SF-20	1/4 PT
SF-30	3/8 PT
SF-40	1/2 PT



SM

Model	Size
SM-20	1/4 PT
SM-30	3/8 PT
SM-40	1/2 PT



SP

Model	Size
SP-20	5/16" Tube
SP-30	3/8" Tube
SP-40	1/2" Tube



PH

Model	Size
PH-20	5/16" Tube
PH-30	3/8" Tube
PH-40	1/2" Tube



PF

Model	Size
PF-20	1/4 PT
PF-30	3/8 PT
PF-40	1/2 PT



PM

Model	Size
PM-20	1/4 PT
PM-30	3/8 PT
PM-40	1/2 PT



PP

Model	Size
PP-20	5/16" Tube
PP-30	3/8" Tube
PP-40	1/2" Tube



Multipass Quick Coupler

SML



SMT



SMM



SMX



SMV



SMY



Polyurethane Tube



PU Tube

Ordering Code

PU	8	×	5	—	B	—	100M
Model code	Tube dia		Tube dia		Tube color		Tube length
PU Tube	OD		ID				200m/roll:(4mm,6mm) 100m/roll:(above 8mm)

Applications

- Pneumatic system,air tools
- Vacuum
- Automation
- Plant Instrumentation
- Paint supply Lines
- Construction applications
- Motion control devices

Specifcation

Model	PU
Working Medium	Compressed air
Working-Pressure	0~1.0MPa
Service temperature range	-20-80℃
Durometer	95 or 98 A

Feature

The Polyurethane tube excels in water-resistant,rseistance,weathering resistance and low temperature resistance.It is more flexibility and kink resistance,also the price is cheaper,more suitable to service piping with strict temperature rwquirements(compared with our Nylon series'tube).

Specifcation

Model	O.D.(mm)	I.D.(mm)	Thickness(mm)	Length M/Roll	Min.bend radius at 20℃ (mm)	Min.burst pressure bar at 20℃ (bar)	Max.working pressure at 20℃ (bar)
PU 4x2.5	4	2.5	0.75	200	10	30	10
PU 6x4	6	4	1.00	200	15	30	10
PU 8x5	8	5	1.50	100	20	30	10
PU 10x6.5	10	6.5	1.75	100	30	30	10
PU 12x8	12	8	2.00	100	35	30	10
PU 16x12	16	12	2.00	100	65	24	8

■ Above listes are just refered the most basic sizes or styles of our products to you. Note:1/4",5/16",3/8",1/2",3/16" and other special sizes are also available.

Color

Color	Tranaparent	Black	Orange	Blue	Dark blue	Sky blue	Clear blue	Green	Red	Yellow	Grey	Milk white
Code	C	B	O	BU	DB	SB	CB	GN	RD	YW	GY	MW
Supplid	●	●	●	●	◆	◆	◆	◆	◆	◆	◆	◆

● means our standard colours of tubing.normally have enough stocks.
◆ means the colours of tubing can be produced if ordered quantity meets our requested(contact us for details).

PUL Series Polyurethane Spiral Tube

PU Spiral Tube



Ordering Code

PUL	8	×	5	—	7	—	O
Model code	Outer dia.		Inner dia.		Length(m)		Tube Color
PUL Spirial Type							

Feature

Coiling Tube is suitable for piping of air guns,air screwdrivers and other air tools.
Piping of movable parts can be achieved within ed space without distorting the joints.

Length Spes

2	3	5	7	10	14	20
2m	3m	5m	7m	10m	14m	20m

Polyethylene Tube



PE Tube

Ordering Code

PE	8	×	5	—	B	—	100M
Model code	Tube dia		Tube dia		Tube color		Tube length
PE Tube	OD		ID				200m/roll:(4mm,6mm) 100m/roll:(above 8mm)

Applications

- Pneumatic system,air tools
- Vacuum
- Automation
- Plant Instrumentation
- Paint supply Lines
- Construction applications
- Motion control devices

Specifcation

Model	PE
Working Medium	Compressed air
Working-Pressure	0~1.0MPa
Service temperature range	-20-60℃
Durometer	80-92 Shore A

Feature

The Polyethulene tube excels in water-resistant,rseistance,weathering resistance and low temperature resistance.It is more flexibility and kink resistance,also the price is cheaper,more suitable to service piping with strict temperature rwquirements(compared with our Nylon series'tube).

Specifcation

Model	O.D.(mm)	I.D.(mm)	Thickness(mm)	Length M/Roll	Min.burst pressure bar at 20℃ (bar)	Max.working pressure at 20℃ (bar)
PE 4x2.5	4	2.5	0.75	200	24	8
PE 6x4	6	4	1.00	200	24	8
PE 8x5	8	5	1.50	100	24	8
PE 10x7.5	10	7.5	1.25	100	24	8
PE 12x9	12	9	1.5	100	24	8
PE 1/4	6.35	4	1.175	200	24	8
PE 3/8	9.52	6.35	1.585	100	24	8
PE 1/2	12.7	8.46	2.12	100	24	8

■ Above listes are just refered the most basic sizes or styles of our products to you. Note:1/4",5/16",3/8",1/2",3/16" and other special sizes are also available.

Color

Color	Tranaparent	Black	Orange	Blue	Dark blue	Sky blue	Clear blue	Green	Red	Yellow	Grey	Milk white
Code	C	B	O	BU	DB	SB	CB	GN	RD	YW	GY	MW
Supplid	●	●	●	●	◆	◆	◆	◆	◆	◆	◆	◆

● means our standard colours of tubing.normally have enough stocks.
◆ means the colours of tubing can be produced if ordered quantity meets our requested(contact us for details).

Nylon Tube



NY Tube

Ordering Code

NY	8	×	6	—	B	—	100M
Model code: NY Tube	Tube dia: OD		Tube dia: ID		Tube color		Tube length: 200m/roll:(4mm,6mm) 100m/roll:(above 8mm)

Applications

- Pneumatic system,air tools
- Vacuum
- Automation
- Plant Instrumentation
- Paint supply Lines
- Construction applications
- Motion control devices

Specifcation

Model	NY
Working Medium	Compressed air
Working-Pressure	0~1.0MPa
Service temperature range	-40-90℃
Durometer	80-92 Shore A

Feature

This kind of nylon tube,which is available in many colors,shows best pressuer resistance resistance and can be used in high-pressure environments.Its excellent chemical.oil and heat resistance result in much wider range of application.

Specifcation

Model	O.D.(mm)	I.D.(mm)	Thickness(mm)	Length M/Roll	Min.bend radius at 20℃ (mm)	Min.burst pressure bar at 20℃ (bar)	Max.working pressure at 20℃ (bar)
NY 4x2.5	4	2.5	0.75	200	20	90	30
NY 6x4	6	4	1.00	200	30	90	30
NY 8x6	8	6	1.00	100	40	90	30
NY 10x7.5	10	7.5	1.25	100	50	90	30
NY 12x9	12	9	1.50	100	60	90	30
NY 10x8	10	6	1.00	100	60	60	20
NY 12x10	12	10	1.00	100	120	90	20
NY 1/4	6.35	4.2	1.075	200	35	90	30
NY 3/8	9.5	6.35	1.575	100	55	90	30
NY 1/2	12.7	9.6	1.55	100	120	90	30

- Above listes are just refered the most basic sizes or styles of our products to you.
  Note:1/4",5/16",3/8",1/2",3/16" and other special sizes are also available.

Color

Color	Natural	Black	Yellow	Milk white	Blue	Clear blue	Red	Green
Code	NT	B	YW	MW	BU	CB	RD	GN
Supplid	●	●	◆	◆	◆	◆	◆	◆

● means our standard colours of tubing.normally have enough stocks.
◆ means the colours of tubing can be produced if ordered quantity meets our requested(contact us for details).

Silencer

B Type Muffler



Code	Screw Thread (Size)	S (mm)
B-M5	M5	8
B-6	1/8"	12
B-8	1/4"	15
B-10	3/8"	19
-B15	1/2"	22
B-20	3/4"	27
B-25	1"	36

V Type Muffler



Code	Screw Thread (Size)	S (mm)
V-M5	M5	8
V-6	1/8"	12
V-8	1/4"	15
V-10	3/8"	19
V15	1/2"	22
V-20	3/4"	30
V-25	1"	36

XB Type Exhaust Muffling Throttle Valve



Code	Screw Thread (Size)	S (mm)
XB-6	1/8"	12
XB-8	1/4"	14
XB-10	3/8"	17
XB-15	1/2"	24
XB-20	3/4"	27
XB-25	1"	34

SC Type Muffler



Code	Screw Thread (Size)	S (mm)
SC-M5	M5	8
SC-6	1/8"	12
SC-8	1/4"	15
SC-10	3/8"	19
SC-15	1/2"	22
SC-20	3/4"	27
SC-25	1"	35

SEB Type Muffler



Code	Screw Thread (Size)	S (mm)
SEB-M5	M5	7
SEB-6	1/8"	12
SEB-8	1/4"	15
SEB-10	3/8"	19
SEB-15	1/2"	23
SEB-20	3/4"	30
SEB-25	1"	36

SET Type Muffler Coppler Plating Feet



Code	Screw Thread (Size)	S (mm)
SET-6	1/8"	8
SET-8	1/4"	10
SET-10	3/8"	13
SET-15	1/2"	15
SET-20	3/4"	19
SET-25	1"	24

SCQ Type Muffler



Code	Screw Thread (Size)	S (mm)
SCQ-6	1/8"	7
SCQ-8	1/4"	8
SCQ-10	3/8"	10
SCQ-15	1/2"	14
SCQ-20	3/4"	17
SCQ-25	1"	21

D Type Muffler



Code	Screw Thread (Size)	S (mm)
D-6	1/8"	8
D-8	1/4"	10
D-10	3/8"	15
D-15	1/2"	19
D-20	3/4"	20
D-25	1"	27

C Type Exhaust Muffling Throttle Valve



Code	Screw Thread (Size)	S (mm)
C-6	1/8"	13
C-8	1/4"	14
C-10	3/8"	17
C-15	1/2"	22
C-20	3/4"	27
C-25	1"	34

SDV Type Muffler



Code	Screw Thread (Size)	S (mm)
SDV-6	1/8"	13
SDV-8	1/4"	16
SDV-10	3/8"	19
SDV-15	1/2"	24
SDV-20	3/4"	30
SDV-25	1"	36

SD Type Muffler



Code	Screw Thread (Size)	S (mm)
SD-6	1/8"	12
SD-8	1/4"	15
SD-10	3/8"	19
SD-15	1/2"	22
SD-20	3/4"	27
SD-25	1"	34

SS-V Type Stainless Steel Muffler



Code	Screw Thread (Size)	S (mm)
SS-V-M5	M5	8
SS-V-6	1/8"	12
SS-V-8	1/4"	15
SS-V-10	3/8"	19
SS-V-15	1/2"	23
SS-V-20	3/4"	30
SS-V-25	1"	36

SSDV Type Stainless Steel Muffler



Code	Screw Thread (Size)	S (mm)
SSDV-6	1/8"	13
SSDV-8	1/4"	16
SSDV-10	3/8"	19
SSDV-15	1/2"	24
SSDV-20	3/4"	30
SSDV-25	1"	36

SSM Type Muffler



Code	Screw Thread (Size)	S (mm)
SSM-M5	M5	8
SSM-6	1/8"	12
SSM-8	1/4"	15
SSM-10	3/8"	19
SSM-15	1/2"	23
SSM-20	3/4"	30
SSM-25	1"	36

SS-PDK Type Exhaust Muffling Throttle Valve



Code	Screw Thread (Size)	S (mm)
SS-PDK-6	1/8"	13
SS-PDK-8	1/4"	14
SS-PDK-10	3/8"	17
SS-PDK-15	1/2"	22
SS-PDK-20	3/4"	27
SS-PDK-25	1"	34

Silencer

PTV Plastic Exhaust Muffling Throttle Valve



Code	Screw Thread (Size)	S (mm)
PTV-6	1/8"	10
PTV-8	1/4"	14
PTV-10	3/8"	17
PTV-15	1/2"	24
PTV-20	3/4"	30
PTV-25	1"	36

SB Type Muffler



Code	Screw Thread (Size)	S (mm)
SB-6	1/8"	11
SB-8	1/4"	14
SB-10	3/8"	17
SB-15	1/2"	22
SB-20	3/4"	27
SB-25	1"	33
SB-32	1-1/4"	43
SB-40	1-1/2"	51
SB-50	2"	60

LM Type Aluminum Muffler



Code	Screw Thread (Size)	S (mm)
LM-1	1/8"	20.5
LM-2	1/4"	20.5
LM-3	3/8"	32
LM-4	1/2"	32
LM-6	3/4"	51
LM-8	1"	51

PSU Type Plastic Muffler



Code	Screw Thread (Size)	S (mm)
PSU-M5	M5	7
PSU-6	1/8"	13
PSU-8	1/4"	17
PSU-10	3/8"	25
PSU-15	1/2"	25
PSU-20	3/4"	
PSU-25	1"	

PSE Type Plastic Muffler



Code	Screw Thread (Size)	S (mm)
PSE-M5	M5	7
PSE-6	1/8"	13
PSE-8	1/4"	17
PSE-10	3/8"	25
PSE-15	1/2"	25
PSE-20	3/4"	37
PSE-25	1"	48

SU Type Plastic Muffler



Code	Screw Thread (Size)	S (mm)
SU-6	1/8"	16
SU-8	1/4"	20
SU-10	3/8"	24
SU-15	1/2"	24
SU-20	3/4"	48
SU-25	1"	48

Air Gun



AG-B-S AG-A-S AG-B-L AG-A-L DG-10 XAG-B-L HG-8

Tube Cutter



Specifcation

Available Tube	Polyurethane and Nylon
Cutting Outer Dia	3.0~14.0
Material	Polyacetal,Stainless Steel

F